www.fenos.be

All information in this catalogue is provided for information purposes only and Fenos makes no representations about the accuracy or completeness of the information in this catalogue. Fenos may revise the information and technical data contain herein at any time without notice.

Fazantenstraat 9940 ,46, Evergem, Belgium

☏+32 (0) 9 335 81 49
VAT: BE0671.501.997
info@fenos.be

Fenos®

2021

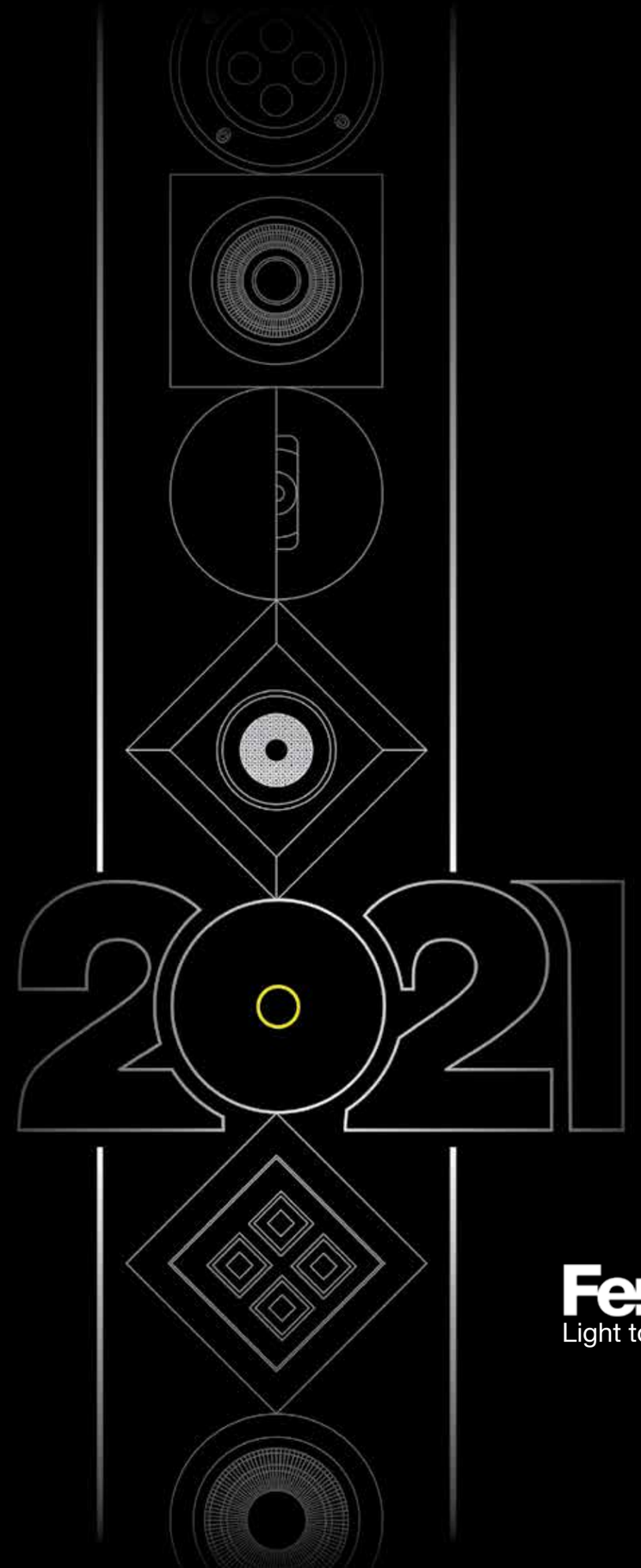

Fenos®
Light to Delight

About Fenos

Fenos products are developed by experts with several years of experience in professional lighting design and product design.
Fenos aims to produce lighting fixtures which can fulfill the needs of a professional lighting designer.
Using high end optics to create a variety of light distributions as well as being aesthetically beautiful, makes Fenos among top choices for architectural lighting.
Fenos comes from the word “Fanoos”, name of a traditional oil lamp mainly used in Middle East region.

TECHNICAL COMPETENCE

1 Focus On Light Distribution

In a professional lighting design project, light sources with several light distributions are required. Using special optics of the latest technology makes Fenos products suitable for a wide range of applications:
From uniform wallwashing for vertical illumination to narrow beam spots to create shadows and enhance modelling effect, low glare optics for office applications or oval distributions for corridors.

2 Thermal Design

All Fenos products are equipped with LED light sources.
For LEDs, proper heat dissipation is a key element to ensure the quality and life time of the product.
During the design process, a lot of attention is paid in order to ensure maximum heat transfer and in the production line, quality control department makes regular checks and measurements with high accuracy thermometer to check the performance of heatsink and ensure that the temperature on LED is far below the allowed limits of LED temperature.
This will maximize the life time of LED and also consistency of color characteristics.

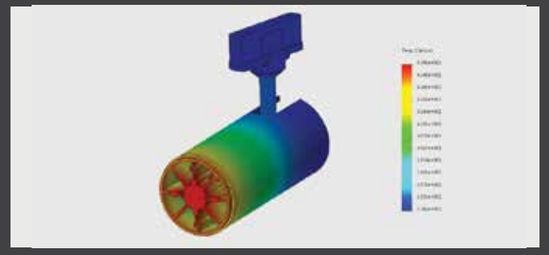

LED is the heart of a light source.
In all Fenos products, LEDs are supplied from the best manufacturers in the world to ensure the constancy in color and quality of light.

3 High Quality LEDs

It is not only about the light distribution but also the visual appearance of the light fixture is important. Minimalistic design and high quality finishing are also important features of Fenos products.

4 Aesthetics of light fixtures

Innovative Products Overview

Vaswa Maxi XS

Are you looking for a light fixture to high light vertical elements of up to 20 meters and still energy efficient?
Are you thinking of creating bright spots on the floor to create a more drama feeling in an outdoor environment? Check specification of Vaswa Maxi XS in page 184.

Nian XS

In many indoor architectural lighting applications, an extreme narrow spot light distribution is required to highlight visually important elements.
Nian XS which is an extension of formerly existing Nian family is a perfect solution for that. Check specification of Nian XS in page 78.

Roni

Roni is the other word for flexibility in lighting. With one size and concept of downlight you can have a wide range of light distribution. Check specification of Roni in page 112.

Darklans

Darklans is equipped with an advanced optic developed by Bartenbach Gmbh. This small but still powerful downlight has an aperture of only 8mm, and even when the fixture is on, one can hardly see any light coming out of it. A real dark light. Check specification of Darklans in page 14.

Felka Mini

Felka Mini track lights have the widest range of light distributions. Having special optics from extreme spot (5°) to extreme wide (60°) and wall washer or oval light distributions, makes Felka Mini a perfect solution for high end museums, galleries and retails.
Check specification of Felka Mini in page 136.

INDEX Indoor

Ceiling Recessed Light

14 Darklans

20 Eyren Micro

24 Eyren Mini

28 Eyren Midi

32 Eyren Maxi

36 Filde Micro

40 Filde Mini

44 Rico

48 Sibron CF-TR

52 Fitran C mini

56 Tiran C Mini

60 Sibron C Micro

64 Sibron C Mini

68 Sibron C Midi

72 Sibron C Maxi

78 Nian

82 Sibron Q Mini

86 Sibron Q Midi

90 Sibron Q Maxi

94 Eyden Mini

98 Eyden L

102 Tiran S

108 Fitran Q

112 Roni WW

116 Roni

120 Valman

INDEX Indoor

Track Light

128 Belta

132 Merbo Mini

136 Merbo Midi

140 Felka Mini

152 Felka Midi

158 Felka Maxi

166 Aro

174 Pelka

178 Vera

182 Vera Twin

Linear Light

186 Sira S 1616

190 Sira R 1616

194 Sira OL

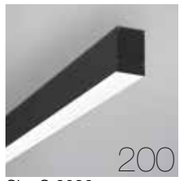
200 Sira S 6090

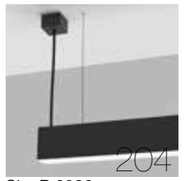
204 Sira P 6090

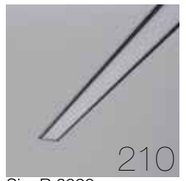
210 Sira R 6090

214 Sira R 6040

INDEX Outdoor

Outdoor light

Silva Midi

Silva Maxi

Vaswa Micro

Vaswa Midi

Vaswa Maxi

Torso

Accessories

Surface Track 3Phase

Krab

LED Strip

INDEX

Category	Name	Page Number	
Indoor Light	Darklans	14	Ceiling Recessed Light
	Eyren Micro	20	
	Eyren Mini	24	
	Eyren Midi	28	
	Eyren Maxi	32	
	Filde Micro	36	
	Filde Mini	40	
	Rico	44	
	SIbron CF-TR	48	
	Fitran C Mini	52	
	Tiran C Mini	56	
	Sibron C Micro	60	
	Sibron C Mini	64	
	Sibron C Midi	68	
	Sibron C Maxi	72	
	Nian	78	
	Sibron Q Mini	82	
	Sibron Q Midi	86	
	Sibron Q Maxi	90	
	Eyden Mini	94	
	Eyden L	98	
	Tiran S	102	
	Fitran Q	108	
	Roni WW	112	
	Roni	116	
	Valman	120	
Indoor Light	Belta	128	Track Light
	Merbo Mini	132	
	Merbo Midi	136	
	Felka Mini	140	
	Felka Midi	152	
	Felka Maxi	158	
	Aro	166	
	Pelka	174	
	Vera	178	
	Vera Twin	182	
Indoor Light	Sira S 1616	186	Linear Light
	Sira R 1616	190	
	Sira OL	194	
	Sira S 6090	200	
	Sira P 6090	204	
	Sira R 6090	210	
	Sira R 6040	214	
Outdoor Light	Silva Midi	220	Profile Light
	Silva Maxi	224	
	Vaswa Micro	228	
	Vaswa Midi	232	
	Vaswa Maxi	238	
	Torso	242	
Accessories	Surface Track 3Phase	250	
	Beno LED Strip	252	
	Krab	252	

Indoor Lighting

Interior architecture is strongly influenced by lighting.
Fenos has a wide range of products for professional indoor lighting with different light distributions, sizes and lumen outputs.

Ceiling Recessed Light

Track Light

Linear Light

Darklans

Ceiling Recessed

Because of using a special double focus optic, the light is coming out of a very small hole with just 8mm diameter. As a result, the glare of the light reduced to minimum, so it seems off when the light is on.

Darklans

Ceiling Recessed

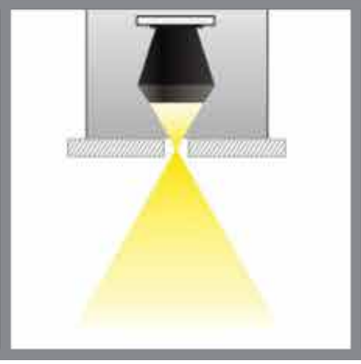

CODE	F180
Light source	LED
Power (W)	9
luminous flux (lm)	800 | 850
Color Rendering (Ra)	>80
Color Temperature (K)	3000 | 4000*
Body Color	White | Black | Silver*

IP 20 70mm

KG 0.30

17 x 13 x 9.3

UGR <19

Supply Voltage:
220-240 Vac,50Hz
Recommended Applications:
Residential | Office | Shop

▲Hana Bouitque Hotel / Architect:Persian Garden

Darklans

Light distributions

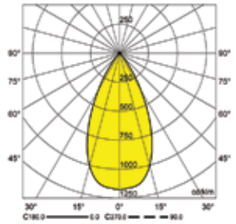

Medium(M)

Accessories

Mandatory

Trimless Installation Kit
Order code: 2180924109

Order code table

Body Color	3000K	Beam Angle	4000K	Body Color
White	F180W930M	Medium	F180W940M	White
Black	F180B930M	Medium	F180B940M	Black
Silver	F180S930M	Medium	F180S940M	Silver

*Customized body colors and other color temperatures (CCTs) are available upon request

Hana Bouitque Hotel / Architect: Persian Garden Studio

Eyren Micro

Ceiling Recessed

Eyren Micro

Ceiling Recessed

Small size, only 45 mm

CODE	F190
Light source	LED
Power (W)	9
luminous flux (lm)	990
Color Rendering (Ra)	>80
Color Temperature (K)	3000 | 4000*
Body Color	White | Black | Silver | Gold Chrome | Copper*

IP 20 70mm

0.31

17 x 13 x 9.3

Supply Voltage:
220-240 Vac,50Hz
Recommended Applications:
Residential | Office | Shop

Aban Residential / Architect: Gozar Andishe

Eyren Micro

Light distributions

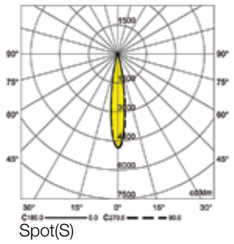

Spot(S)

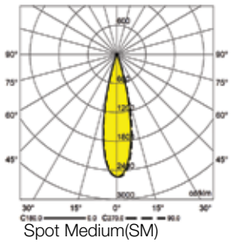

Spot Medium(SM)

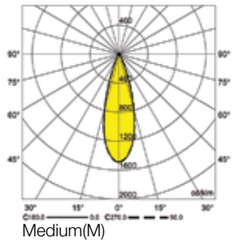

Medium(M)

Accessories

Mandatory

Trimless Installation Kit
Order code: 2180924109

Order code table

Body Color	3000K	Beam Angle	4000K	Body Color
White	F190W930S	Spot	F190W940S	White
	F190W930SM	Spot Medium	F190W940SM	
	F190W930M	Medium	F190W940M	

Body Color	3000K	Beam Angle	4000K	Body Color
Black	F190B930S	Spot	F190B940S	Black
	F190B930SM	Spot Medium	F190B940SM	
	F190B930M	Medium	F190B940M	

Body Color	3000K	Beam Angle	4000K	Body Color
Gold	F190G930S	Spot	F190G940S	Gold
	F190G930SM	Spot Medium	F190G940SM	
	F190G930M	Medium	F190G940M	

Body Color	3000K	Beam Angle	4000K	Body Color
Chrome	F190CR930S	Spot	F190CR940S	Chrome
	F190CR930SM	Spot Medium	F190CR940SM	
	F190CR930M	Medium	F190CR940M	

Body Color	3000K	Beam Angle	4000K	Body Color
Copper	F190CO930S	Spot	F190CO940S	Copper
	F190CO930SM	Spot Medium	F190CO940SM	
	F190CO930M	Medium	F190CO940M	

*Customized body colors and other color temperatures (CCTs) are available upon request

Eyren Mini

Ceiling Recessed

Eyren Mini

Ceiling Recessed

CODE	F191
Light source	LED
Power (W)	12
luminous flux (lm)	1300
Color Rendering (Ra)	>80
Color Temperature (K)	3000 | 4000*
Body Color	White | Black | Gold Chrome | Copper*

IP 20 95mm

0.37

20 x 16 x 12.3

For GU10 Version

Supply Voltage:
220-240 Vac,50Hz
Recommended Applications:
Residential | Office | Shop

Eyren Mini

Light distributions

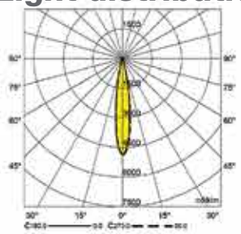

Spot(S)

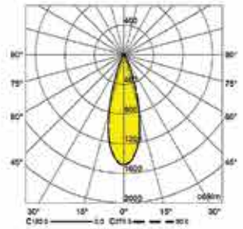

Medium(M)

Accessories

Optional

LED GU10 Lamp
Order code: 10020101

Mandatory

Trimless Installation Kit
Order code: 2180924109

Order code table

Body Color	3000K	Beam Angle	4000K	Body Color
White	F191W930S	Spot	F191W940S	White
	F191W930M	Medium	F191W940M	

Body Color	3000K	Beam Angle	4000K	Body Color
Black	F191B930S	Spot	F191B940S	Black
	F191B930M	Medium	F191B940M	

Body Color	3000K	Beam Angle	4000K	Body Color
Gold	F191G930S	Spot	F191G940S	Gold
	F191G930M	Medium	F191G940M	

Body Color	3000K	Beam Angle	4000K	Body Color
Chrome	F191CR930S	Spot	F191CR940S	Chrome
	F191CR930M	Medium	F191CR940M	

Body Color	3000K	Beam Angle	4000K	Body Color
Copper	F191CO930S	Spot	F191CO940S	Copper
	F191CO930M	Medium	F191CO940M	

Order code for GU10 Version**

Body Color	Body Code	Body Code	Body Color
White	F191WG	F191BG	Black

*Customized body colors and other color temperatures (CCTs) are available upon request
**Lamp is not Included

Eyren Midi

Ceiling Recessed

Eyren Midi

Ceiling Recessed

CODE	F192
Light source	LED
Power (W)	20
luminous flux (lm)	2200
Color Rendering (Ra)	>80
Color Temperature (K)	3000 | 4000*
Body Color	White | Black | Gold Chrome | Copper*

IP 20 115mm

0.78

20 x 16 x 12.3

Supply Voltage:
220-240 Vac,50Hz
Recommended Applications:
Office | Shop

Eyren Midi

Light distributions

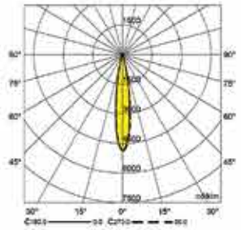

Spot(S)

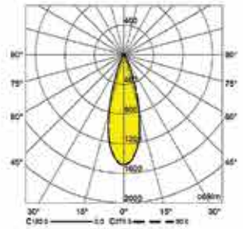

Medium(M)

Accessories

Mandatory

Trimless Installation Kit
Order code: 2180924109

Order code table

Body Color	3000K	Beam Angle	4000K	Body Color
White	F192W930S	Spot	F192W940S	White
	F192W930M	Medium	F192W940M	

Body Color	3000K	Beam Angle	4000K	Body Color
Black	F192B930S	Spot	F192B940S	Black
	F191B930M	Medium	F192B940M	

Body Color	3000K	Beam Angle	4000K	Body Color
Gold	F192G930S	Spot	F192G940S	Gold
	F192G930M	Medium	F192G940M	

Body Color	3000K	Beam Angle	4000K	Body Color
Chrome	F192CR930S	Spot	F192CR940S	Chrome
	F192CR930M	Medium	F192CR940M	

Body Color	3000K	Beam Angle	4000K	Body Color
Copper	F192CO930S	Spot	F192CO940S	Copper
	F192CO930M	Medium	F192CO940M	

*Customized body colors and other color temperatures (CCTs) are available upon request

Eyren Maxi

Ceiling Recessed

Eyren Maxi

Ceiling Recessed

CODE	F193
Light source	LED
Power (W)	30
luminous flux (lm)	3300
Color Rendering (Ra)	>80
Color Temperature (K)	3000 | 4000*
Body Color	White | Black | Gold Chrome | Copper*

IP 20 145mm

1.08

14 x 14 x 20

Supply Voltage:
220-240 Vac,50Hz
Recommended Applications:
Office | Shop

Eyren Maxi

Light distributions

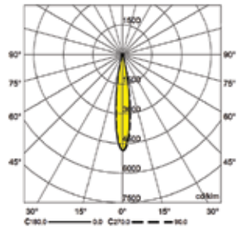

Spot(S)

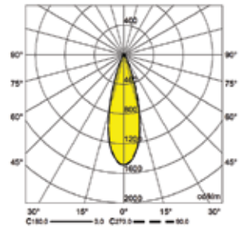

Medium(M)

Accessories

Mandatory

Trimless Installation Kit
Order code: 2180924109

Order code table

Body Color	3000K	Beam Angle	4000K	Body Color
White	F193W930S	Spot	F193W940S	White
	F193W930M	Medium	F193W940M	

Body Color	3000K	Beam Angle	4000K	Body Color
Black	F193B930S	Spot	F193B940S	Black
	F193B930M	Medium	F193B940M	

Body Color	3000K	Beam Angle	4000K	Body Color
Gold	F193G930S	Spot	F193G940S	Gold
	F193G930M	Medium	F193G940M	

Body Color	3000K	Beam Angle	4000K	Body Color
Chrome	F193CR930S	Spot	F193CR940S	Chrome
	F193CR930M	Medium	F193CR940M	

Body Color	3000K	Beam Angle	4000K	Body Color
Copper	F193CO930S	Spot	F193CO940S	Copper
	F193CO930M	Medium	F193CO940M	

*Customized body colors and other color temperatures (CCTs) are available upon request

Filde Micro

Ceiling Recessed

Filde Micro is a minimal adjustable downlight with different light distributions from spot to wide.

Filde Micro

Ceiling Recessed

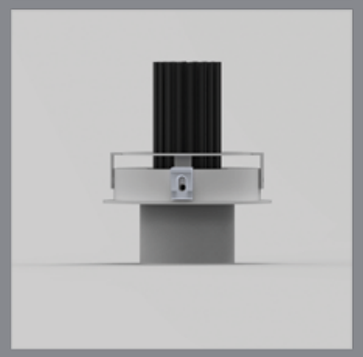

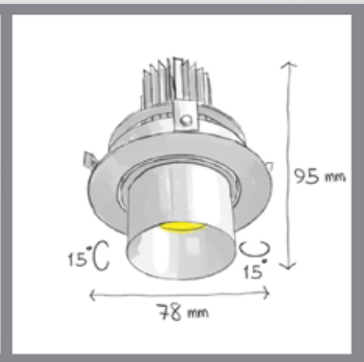

CODE	F123
Light source	LED
Power (W)	9
luminous flux (lm)	990
Color Rendering (Ra)	>80
Color Temperature (K)	3000 | 4000*
Body Color	White | Black*

IP 20 70mm

0.34 (Kg)

17 x 13 x 9.3 (Cm)

Supply Voltage:
220-240 Vac,50Hz
Recommended Applications:
Residential | Office | Shop

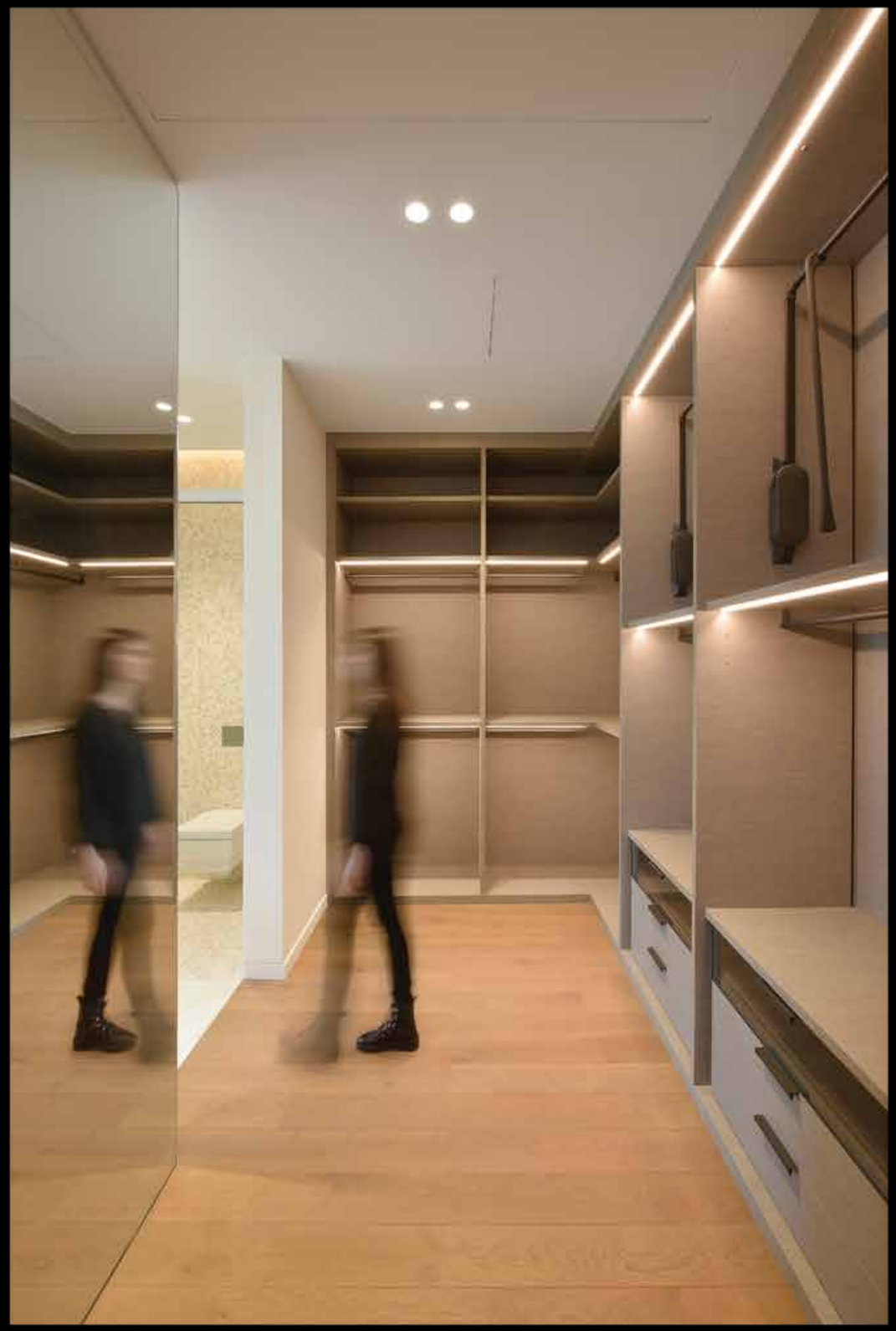

Kafi Abadi Residential / Architect: Bonsar Office 2019

Filde Micro

Light distributions

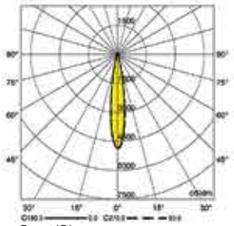

Spot(S)

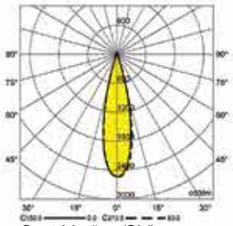

Spot Medium(SM)

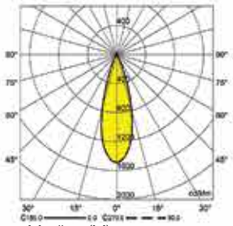

Medium(M)

Accessories

Optional

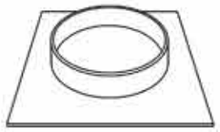

Recessed Kit
Order code: 2123924125

Order code table

Body Color	3000K	Beam Angle	4000K	Body Color
White	F123W930S	Spot	F123W940S	White
	F123W930SM	Spot-Medium	F123W940SM	
	F123W930M	Medium	F123W940M	

Body Color	3000K	Beam Angle	4000K	Body Color
Black	F123B930S	Spot	F123B940S	Black
	F123B930SM	Spot-Medium	F123B940SM	
	F123B930M	Medium	F123B940M	

*Customized body colors and other color temperatures (CCTs) are available upon request

Filde Mini

Ceiling Recessed

Filde Mini

Ceiling Recessed

CODE	F124
Light source	LED
Power (W)	12
luminous flux (lm)	1300
Color Rendering (Ra)	>80
Color Temperature (K)	3000 | 4000*
Body Color	White | Black*

IP 20 84mm

0.45 (GU10: 0.29) (Kg)

For GU10 Version

20 x 16 x 12.3 (Cm)

Supply Voltage:
220-240 Vac,50Hz

Recommended Applications:
Residential | Office | Shop

Tavassoli Residential / Architect: Paradaim 2020

Filde Mini

Light distributions

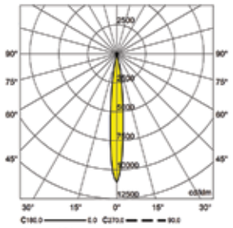

Spot(S)

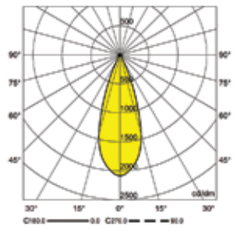

Medium(M)

Accessories

Optional

LED GU10 Lamp
Order code: 10020101

Optional

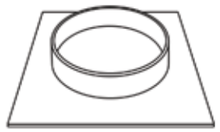

Recessed Kit
Order code: 2124924125

Order code table

Body Color	3000K	Beam Angle	4000K	Body Color
White	F124W1230S	Spot	F124W1240S	White
	F124W1230M	Medium	F124W1240M	

Body Color	3000K	Beam Angle	4000K	Body Color
Black	F124B1230S	Spot	F124B1240S	Black
	F124B1230M	Medium	F124B1240M	

Order code for GU10 Version**

Body Color	Body Code	Body Code	Body Color
White	F124WG	F124BG	Black

*Customized body colors and other color temperatures (CCTs) are available upon request
**Lamp is not Included

Rico
Ceiling Recessed

Rico

Ceiling Recessed

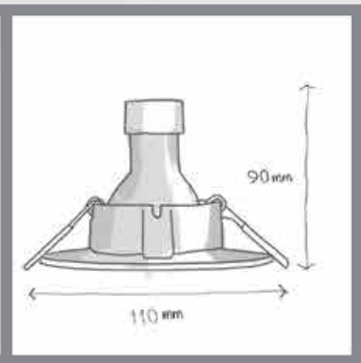

CODE	F114
Light source	LED
Power (W)	6
luminous flux (lm)	550
Color Rendering (Ra)	>80
Color Temperature (K)	3000
Body Color	White | Black*

IP 20 70mm

0.24 (Kg)

17 x 13 x 9.3 (Cm)

Supply Voltage:
220-240 Vac,50Hz
Recommended Applications:
Residential | Office | Shop

ASP Residential / Architect: Gozar Andishe

Light distributions

Accessories

Optional

LED GU10 Lamp
Order code: 10020101

Optional

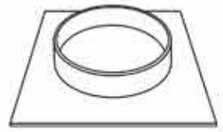

Recessed Kit
Order code: 2114924125

Order code for GU10 Version**

Body Color	Body Code	Body Code	Body Color
White	F114WG	F114BG	Black

*Customized body colors and other color temperatures (CCTs) are available upon request
**Lamp is not Included

Sibron CF-TR

Ceiling Recessed

Trimless lights are also considered by architects and interior designers in modern architectural monuments, as well as in classical architectural monuments.
Sibron CF-TR can be fitted with a special kit on false ceilings with gypsum tiles (such as Knauf) and also on traditional gypsum ceilings.

Sibron CF-TR

Ceiling Recessed

CODE	F136
Light source	LED
Power (W)	12
luminous flux (lm)	1300
Color Rendering (Ra)	>80
Color Temperature (K)	3000 | 4000*
Body Color	White | Black*

IP 20 84mm

0.36 (GU10: 0.31) (Kg)

For GU10 Version

20 x 16 x 12.3 (Cm)

Supply Voltage:
220-240 Vac,50Hz
Recommended Applications:
Residential | Office | Shop

▲Kafi Abadi Residential / Architect: Bonsar Office 2019

Tavassoli Residential / Architect: Arsalan Golmakani / Paradim Office ▼

Sibron CF-TR

Light distributions

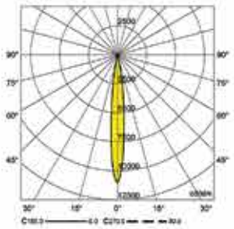

Spot(S)

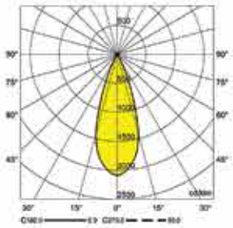

Medium(M)

Accessories

Optional

LED GU10 Lamp
Order code: 10020101

Order code table

Body Color	3000K	Beam Angle	4000K	Body Color
White	F136W1230S	Spot	F136W1240S	White
	F136W1230M	Medium	F136W1240M	

Body Color	3000K	Beam Angle	4000K	Body Color
Black	F136B1230S	Spot	F136B1240S	Black
	F136B1230M	Medium	F136B1240M	

Order code for GU10 Version**

Body Color	Body Code	Body Code	Body Color
White	F136WG	F136BG	Black

*Customized body colors and other color temperatures (CCTs) are available upon request
**Lamp is not Included

Fitran C Mini

Ceiling Recessed

Fitran C Mini

Ceiling Recessed

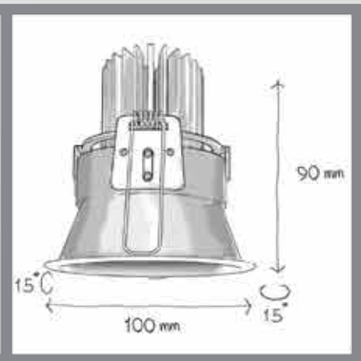

CODE	F128
Light source	LED
Power (W)	12
luminous flux (lm)	1300
Color Rendering (Ra)	>80
Color Temperature (K)	3000 | 4000*
Body Color	White | Black*

IP 20 90mm

0.268 | 0.373 (Kg)

For GU10 Version

20 x 16 x 12.3 (Cm)

Supply Voltage:
220-240 Vac,50Hz

Recommended Applications:
Residential | Office | Shop

Ravi Gallery / Architect: Roshanak Tehrani Studio

Fitran C Mini

Light distributions

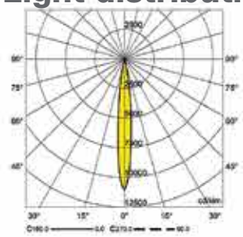

Spot(S)

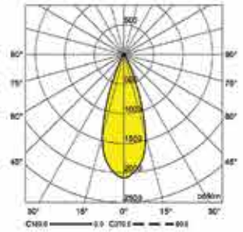

Medium(M)

Accessories

Optional

LED GU10 Lamp
Order code: 10020101

Optional

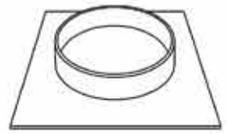

Recessed Kit
Order code: 2127924125

Order code table

Body Color	3000K	Beam Angle	4000K	Body Color
White	F128W1230S	Spot	F128W1240S	White
	F128W1230M	Medium	F128W1240M	

Body Color	3000K	Beam Angle	4000K	Body Color
Black	F128B1230S	Spot	F128B1240S	Black
	F128B1230M	Medium	F128B1240M	

Order code for GU10 Version**

Body Color	Body Code	Body Code	Body Color
White	F128WG	F128BG	Black

*Customized body colors and other color temperatures (CCTs) are available upon request
**Lamp is not Included

Tiran C Mini

Ceiling Recessed

Tiran C Mini

Ceiling Recessed

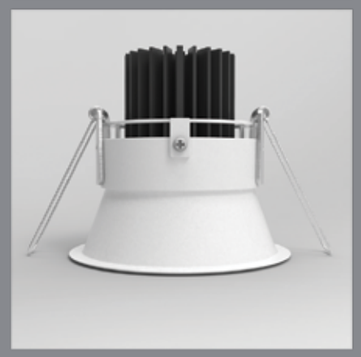

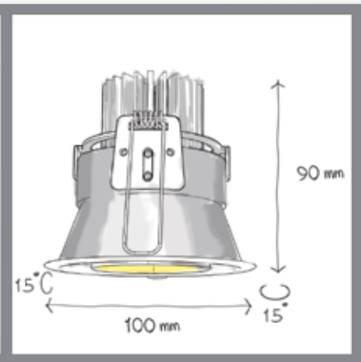

CODE	F127
Light source	LED
Power (W)	12
luminous flux (lm)	1300
Color Rendering (Ra)	>80
Color Temperature (K)	3000 | 4000*
Body Color	White | Black*

IP 20 90mm

0.48 (Kg)

20 x 16 x 12.3 (Cm)

For GU10 Version

Supply Voltage:
220-240 Vac,50Hz
Recommended Applications:
Residential | Office | Shop

LAVAN / Architect: Fallah 2014

Tiran C Mini

Light distributions

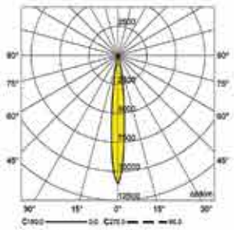

Spot(S)

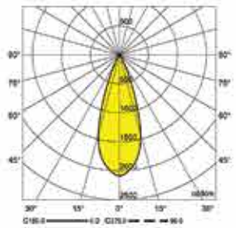

Medium(M)

Accessories

Optional

LED GU10 Lamp
Order code: 10020101

Optional

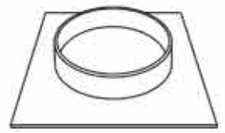

Recessed Kit
Order code: 2127924125

Order code table

Body Color	3000K	Beam Angle	4000K	Body Color
White	F127W1230S	Spot	F127W1240S	White
	F127W1230M	Medium	F127W1240M	

Body Color	3000K	Beam Angle	4000K	Body Color
Black	F127B1230S	Spot	F127B1240S	Black
	F127B1230M	Medium	F127B1240M	

Order code for GU10 Version**

Body Color	Body Code	Body Code	Body Color
White	F127WG	F127BG	Black

*Customized body colors and other color temperatures (CCTs) are available upon request
**Lamp is not Included

Sibron C Micro

Ceiling Recessed

Sibron C Micro

Ceiling Recessed

CODE	F134
Light source	LED
Power (W)	9
luminous flux (lm)	990
Color Rendering (Ra)	>80
Color Temperature (K)	3000 | 4000*
Body Color	White | Black*

IP 20 58mm

0.24 (Kg)

17 x 13 x 9.3 (Cm)

Supply Voltage:
220-240 Vac,50Hz
Recommended Applications:
Residential | Office | Shop

Dorin Ston Parsian / Architect: ZAV 2018

Sibron C Micro

Light distributions

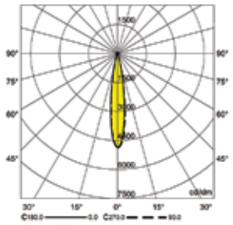

Spot(S)

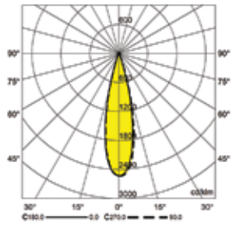

Spot Medium(SM)

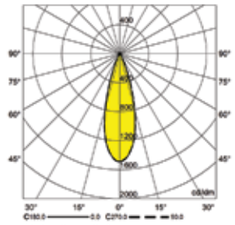

Medium(M)

Accessories

Optional

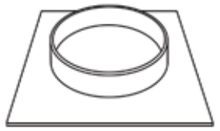

Recessed Kit
Order code: 2123924125

Order code table

Body Color	3000K	Beam Angle	4000K	Body Color
White	F134W930S	Spot	F134W940S	White
	F134W930SM	Spot-Medium	F134W940SM	
	F134W930M	Medium	F1345W940M	

Body Color	3000K	Beam Angle	4000K	Body Color
Black	F134B930S	Spot	F134B940S	Black
	F134B930SM	Spot-Medium	F134B940SM	
	F134B930M	Medium	F134B940M	

*Customized body colors and other color temperatures (CCTs) are available upon request

Sibron C Mini

Ceiling Recessed

The Specific design of the bottom frame with it's strips reduce the direct view to the light point and of course the glare

Sibron C Mini

Ceiling Recessed

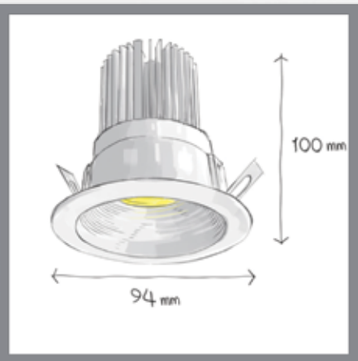

CODE	F135
Light source	LED
Power (W)	12
luminous flux (lm)	1300
Color Rendering (Ra)	>80
Color Temperature (K)	3000 | 4000*
Body Color	White | Black*

IP 20 80mm

0.46 (GU10: 0.44) (Kg)

For GU10 Version

20 x 16 x 12.3 (Cm)

Supply Voltage:
220-240 Vac,50Hz

Recommended Applications:
Residential | Office | Shop

▲ Charisma Office / Architect: Cando Archineering Group 2019

Sabad Gardan / Architect: Persian Garden Studio ▼

Sibron C Mini

Light distributions

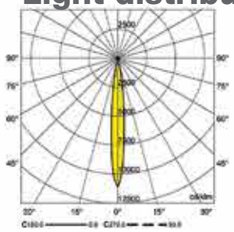

Spot(S)

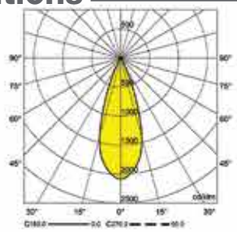

Medium(M)

Accessories

Optional

LED GU10 Lamp
Order code: 10020101

Optional

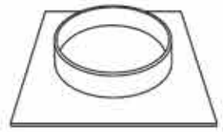

Recessed Kit
Order code: 2135924125

Order code table

Body Color	3000K	Beam Angle	4000K	Body Color
White	F135W1230S	Spot	F135W1240S	White
	F135W1230M	Medium	F135W1240M	

Body Color	3000K	Beam Angle	4000K	Body Color
Black	F135B1230S	Spot	F135B1240S	Black
	F135B1230M	Medium	F135B1240M	

Order code for GU10 Version**

Body Color	Body Code	Body Code	Body Color
White	F135WG	F135BG	Black

*Customized body colors and other color temperatures (CCTs) are available upon request
**Lamp is not Included

Sibron C Midi

Ceiling Recessed

Specific design of the bottom frame with it's strips reduce the direct view to the light point and of course glare

Sibron C Midi

Ceiling Recessed

CODE	F137
Light source	LED
Power (W)	20
luminous flux (lm)	2200
Color Rendering (Ra)	>80
Color Temperature (K)	3000 | 4000*
Body Color	White | Black*

IP 20 102mm

0.67 (Kg)

20 x 16 x 12.3 (Cm)

Supply Voltage:
220-240 Vac,50Hz
Recommended Applications:
Office | Shop

▲Dorine Stone / Architect: ZAV 2018 ▼

Sibron C Midi

Light distributions

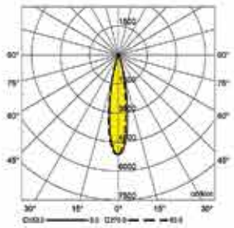

Spot(S)

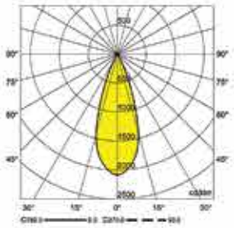

Medium(M)

Accessories

Optional

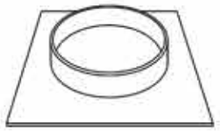

Recessed Kit
Order code: 2137924125

Order code table

Body Color	3000K	Beam Angle	4000K	Body Color
White	F137W2030S	Spot	F137W2040S	White
	F137W2030M	Medium	F137W2040M	

Body Color	3000K	Beam Angle	4000K	Body Color
Black	F137B2030S	Spot	F137B2040S	Black
	F137B2030M	Medium	F137B2040M	

*Customized body colors and other color temperatures (CCTs) are available upon request

Sibron C Maxi

Ceiling Recessed

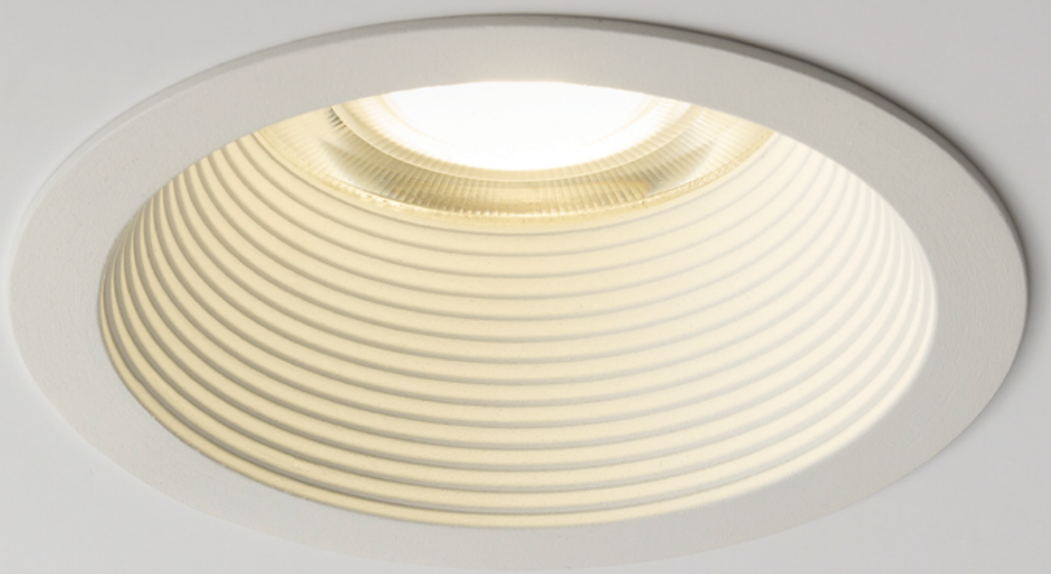

Specific design of the bottom frame with it's strips reduce the direct view to the light point and of course glare

Sibron C Maxi

Ceiling Recessed

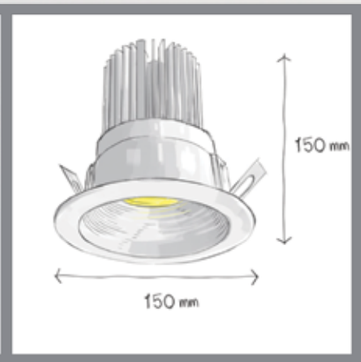

CODE	F138
Light source	LED
Power (W)	30
luminous flux (lm)	3300
Color Rendering (Ra)	>80
Color Temperature (K)	3000 | 4000*
Body Color	White | Black*

IP 20 130mm

1.16 (Kg)

28 x 25 x 17 (Cm)

Supply Voltage:
220-240 Vac,50Hz
Recommended Applications:
Office | Shop

Dorine Stone / Architect: ZAV 2018

Sibron C Maxi

Light distributions

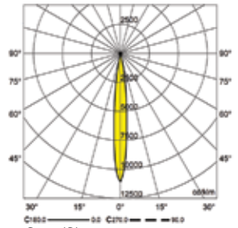

Spot(S)

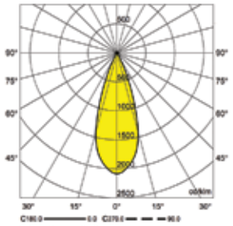

Medium(M)

Accessories

Optional

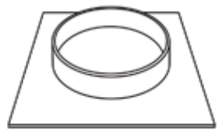

Recessed Kit
Order code: 2138924125

Order code table

Body Color	3000K	Beam Angle	4000K	Body Color
White	F138W3030S	Spot	F138W3040S	White
	F138W3030M	Medium	F138W3040M	

Body Color	3000K	Beam Angle	4000K	Body Color
Black	F138B3030S	Spot	F138B3040S	Black
	F138B3030M	Medium	F138B3040M	

*Customized body colors and other color temperatures (CCTs) are available upon request

Alborz Ceramic Show room / Architect: Arschiform Architect 2018

Nian
Ceiling Recessed

Accent lighting is one of the key elements in architectural lighting design. Spot lighting on objects, attracts people's attention to that object, and creates the feeling of drama in the space.
We as human being like shadows. A completely uniform lit environment resembles a cloudy day for us. The extreme narrow beam of Nian XS family, generated by a sophisticated high tech optic and a powerful compact light source is a good solution.
In retail environment, increase level of contrast between light and dark spaces, gives a feeling of more luxury and special feeling to the customer.

Nian

Ceiling Recessed

CODE	F130
Light source	LED
Power (W)	9* | 12
luminous flux (lm)	600 | 1320
Color Rendering (Ra)	>80
Color Temperature (K)	3000 | 4000**
Body Color	White&Black**

*XS Version

IP 20 102mm CE

0.64 (Kg)

20 x 16 x 12.3 (Cm)

Supply Voltage:
220-240 Vac,50Hz
Recommended Applications:
Residential | Office | Shop | Restaurant

Alborz Ceramic Showroom / Architect: Archiform 2018 ▼

▲ Mozafarian Jewellery / Architect: Ehsan Mohajer 2017

Nian

Light distributions

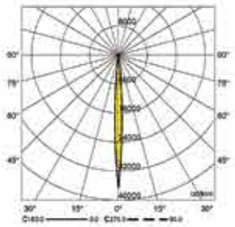

Extreme Spot (XS)

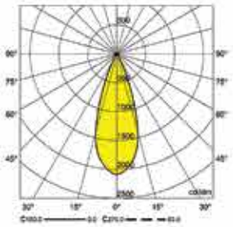

Medium(M)

Accessories

Optional

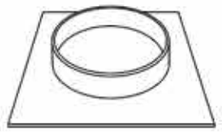

Recessed Kit
Order code: 2130924125

Order code table

Body Color	3000K	Beam Angle	4000K	Body Color
White & Black	F130WB930XS	Extreme-Spot	F130WB940XS	White & Black
	F130WB1230M	Medium	F130WB1240M	

**Customized body colors and other color temperatures (CCTs) are available upon request

Sibron Q Mini

Ceiling Recessed

Sibron Q Mini

Ceiling Recessed

CODE	F140
Light source	LED
Power (W)	12
luminous flux (lm)	1300
Color Rendering (Ra)	>80
Color Temperature (K)	3000 | 4000*
Body Color	White | Black*

IP 20 — 70mm — CE

KG 0.23 (GU10: 0.35) (Kg) — For GU10 Version

20 x 16 x 12.3 (Cm)

Supply Voltage:
220-240 Vac,50Hz

Recommended Applications:
Residential | Office | Shop

Cafe Bazar Office / Architect: Mohammad Khavarian

Sibron Q Mini

Light distributions

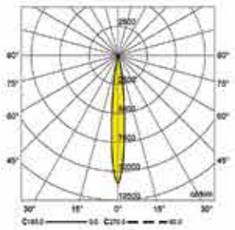

Spot(S)

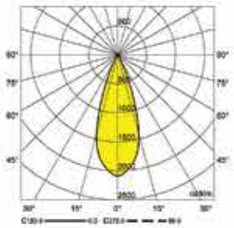

Medium(M)

Accessories

Optional

LED GU10 Lamp
Order code: 10020101

Optional

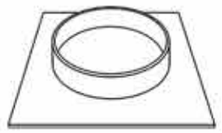

Recessed Kit
Order code: 2140924125

Order code table

Body Color	3000K	Beam Angle	4000K	Body Color
White	F140W1230S	Spot	F140W1240S	White
	F140W1230M	Medium	F140W1240M	

Body Color	3000K	Beam Angle	4000K	Body Color
Black	F140B1230S	Spot	F140B1240S	Black
	F140B1230M	Medium	F140B1240M	

Order code for GU10 Version**

Body Color	Body Code	Body Code	Body Color
White	F140WG	F140BG	Black

*Customized body colors and other color temperatures (CCTs) are available upon request
**Lamp is not Included

Sibron Q Midi

Ceiling Recessed

Sibron Q Midi

Ceiling Recessed

CODE	F141
Light source	LED
Power (W)	20
luminous flux (lm)	2200
Color Rendering (Ra)	>80
Color Temperature (K)	3000 | 4000*
Body Color	White | Black*

IP 20 90mm

0.59 (Kg)

20 x 16 x 12.3 (Cm)

Supply Voltage:
220-240 Vac,50Hz
Recommended Applications:
Residential | Office | Shop

▲ Aban Residential / Architect: Gozar Andisheh 2019 ▼

Sibron Q Midi

Light distributions

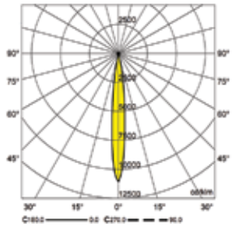

Spot(S)

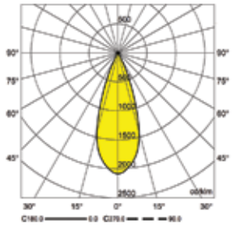

Medium(M)

Accessories

Optional

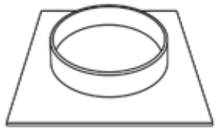

Recessed Kit
Order code: 2141924125

Order code table

Body Color	3000K	Beam Angle	4000K	Body Color
White	F141W2030S	Spot	F141W2040S	White
	F141W2030M	Medium	F141W2040M	

Body Color	3000K	Beam Angle	4000K	Body Color
Black	F141B2030S	Spot	F141B2040S	Black
	F141B2030M	Medium	F141B2040M	

*Customized body colors and other color temperatures (CCTs) are available upon request

Sibron Q Maxi

Ceiling Recessed

Sibron Q Maxi

Ceiling Recessed

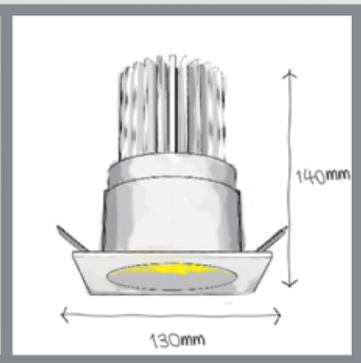

CODE	F142
Light source	LED
Power (W)	30
luminous flux (lm)	3300
Color Rendering (Ra)	>80
Color Temperature (K)	3000 | 4000*
Body Color	White | Black*

IP 20 115mm

0.78 (Kg)

28 x 25 x 17 (Cm)

Supply Voltage:
220-240 Vac,50Hz

Recommended Applications:
Hotel | Office | Shop

Loutka Restaurant / Architect: Arsh Studio

Sibron Q Maxi

Light distributions

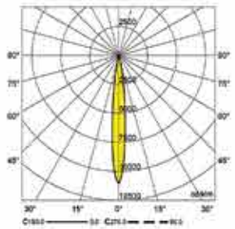

Spot(S)

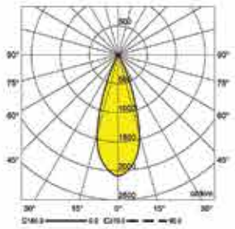

Medium(M)

Accessories

Optional

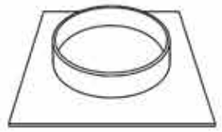

Recessed Kit
Order code: 2142924125

Order code table

Body Color	3000K	Beam Angle	4000K	Body Color
White	F142W3030S	Spot	F142W3040S	White
	F142W3030M	Medium	F142W3040M	

Body Color	3000K	Beam Angle	4000K	Body Color
Black	F142B3030S	Spot	F142B3040S	Black
	F142B3030M	Medium	F142B3040M	

*Customized body colors and other color temperatures (CCTs) are available upon request

Eyden Mini

Ceiling Recessed

Pure minimal design and low glare

Eyden Mini

Ceiling Recessed

Trimless Version

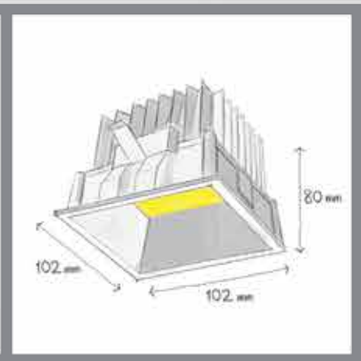

CODE	F150
Light source	LED
Power (W)	10
luminous flux (lm)	1100
Color Rendering (Ra)	>80
Color Temperature (K)	3000 | 4000*
Body Color	White | Black*

IP 20

95X95mm
113X113 mm
(Trimless Version)

0.54 (Kg)

20 x 16 x 12.3 (Cm)

Supply Voltage:
220-240 Vac,50Hz

Recommended Applications:
Residential | Office | Shop

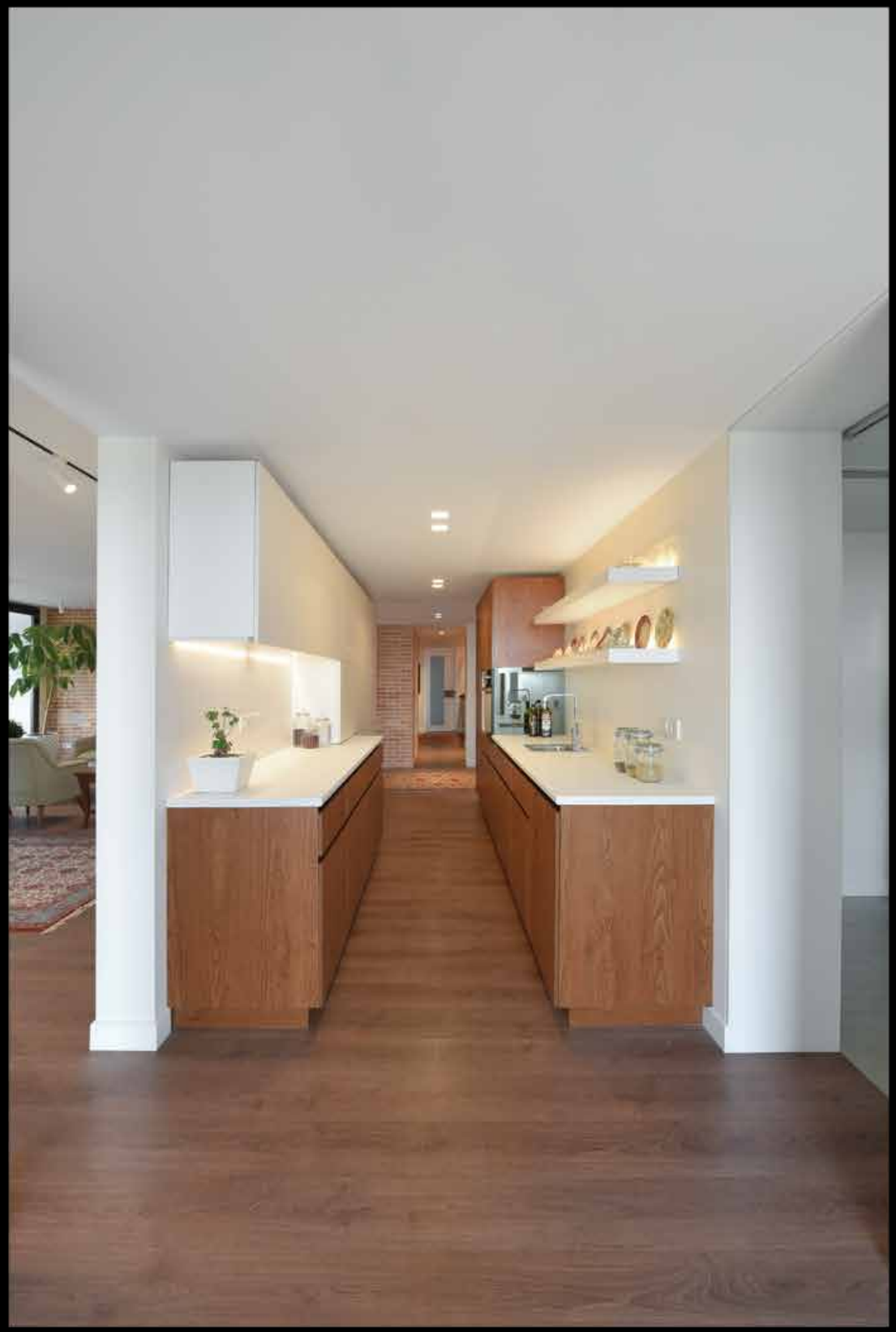

ASP Residential / Architect: Gozar Andisheh 2018

Eyden Mini

Light distributions

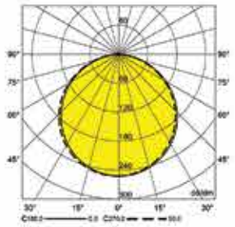

Wide(W)

Accessories

Mandatory

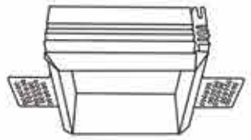

Trimless Installation Kit
Order code: 2099924117
For Trimless Version Only

Optional

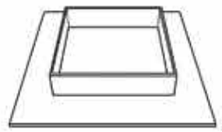

Recessed Kit
Order code: 2150924125

Order code table

Body Color	3000K	Beam Angle	4000K	Body Color
White	F150W1030W	Wide	F150W1040W	White
Black	F150B1030W	Wide	F150B1040W	Black

Order code table trimless version

Body Color	3000K	Beam Angle	4000K	Body Color
White	F153W1030W	Wide	F153W1040W	White
Black	F153B1030W	Wide	F153B1040W	Black

*Customized body colors and other color temperatures (CCTs) are available upon request

Eyden L

Ceiling Recessed

This simple square luminaire with deep regressed positioning of the LED guarantees minimal glare

Eyden L

Ceiling Recessed

Trimless Version

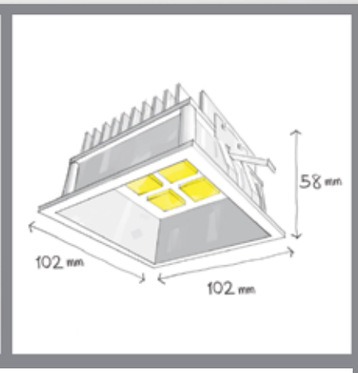

CODE	F152
Light source	LED
Power (W)	15
luminous flux (lm)	1500
Color Rendering (Ra)	>80
Color Temperature (K)	3000 | 4000*
Body Color	White | Black | White&Black*

IP 20

95X95mm
113X113 mm
(Trimless Version)

0.56 (Kg)

20 x 16 x 12.3 (Cm)

Supply Voltage:
220-240 Vac,50Hz

Recommended Applications:
Residential | Office | Shop

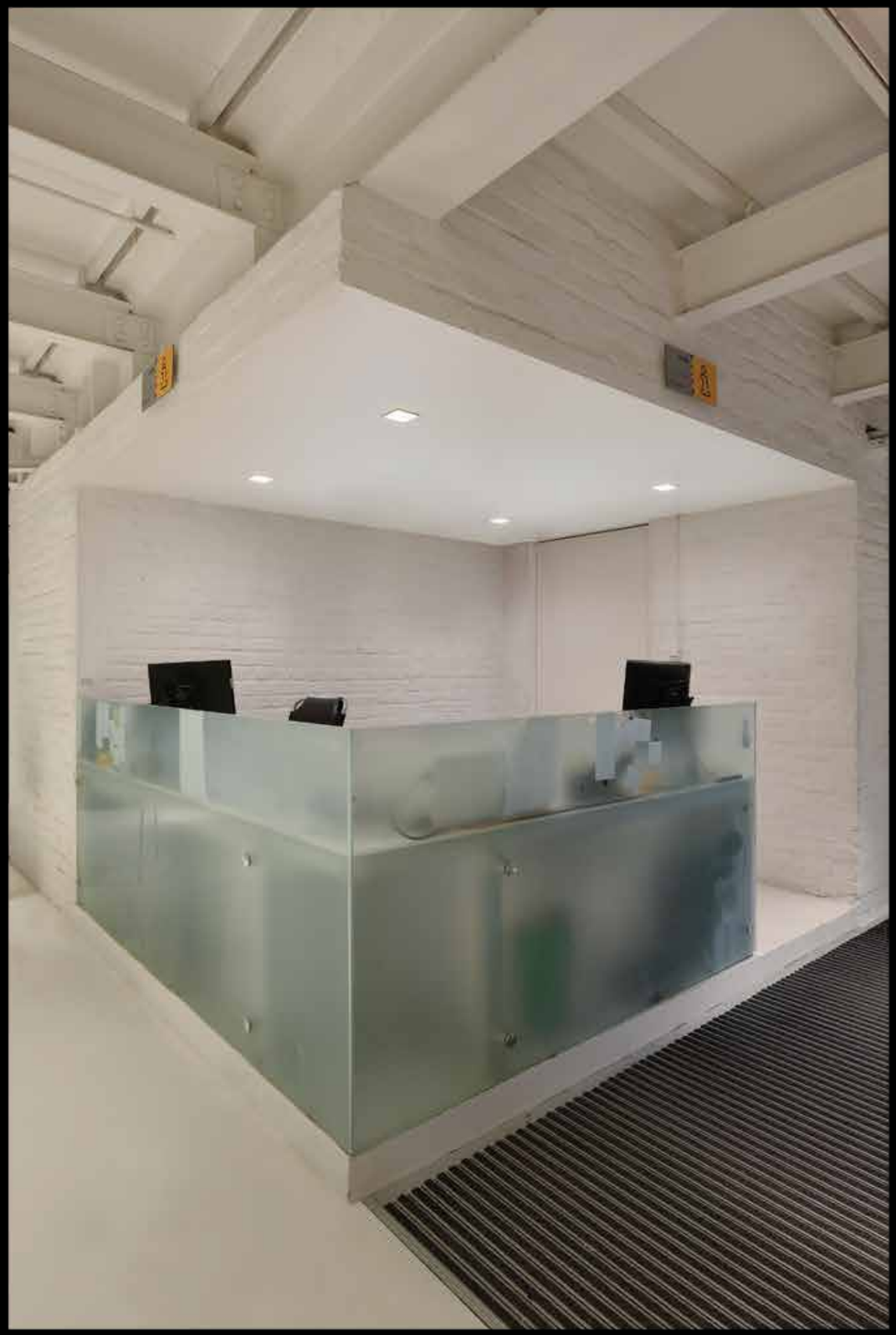

Alibaba Centeral Office / Architect: Shift Process & Practice 2019

Eyden L

Light distributions

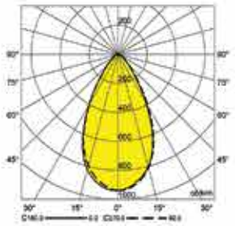

Wide(W)

Accessories

Mandatory

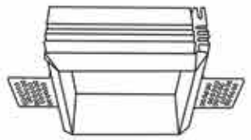

Trimless Installation Kit
Order code: 2099924117
For Trimless Version Only

Optional

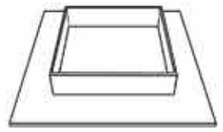

Recessed Kit
Order code: 2152924125

Order code table

Body Color	3000K	Beam Angle	4000K	Body Color
White	F152W1530W	Wide	F152W1540W	White
Black	F152B1530W	Wide	F152B1540W	Black
White & Black	F152WB1530W	Wide	F152WB1540W	White & Black

Order code table trimless version

Body Color	3000K	Beam Angle	4000K	Body Color
White	F154W1530W	Wide	F154W1540W	White
Black	F154B1530W	Wide	F154B1540W	Black
White & Black	F154WB1530W	Wide	F154WB1540W	White & Black

*Customized body colors and other color temperatures (CCTs) are available upon request

Tiran S

Ceiling Recessed

The contrast between square shape of the frame and round shape of light source is an interesting feature for many designers.

Tiran S

Ceiling Recessed

Trimless Version

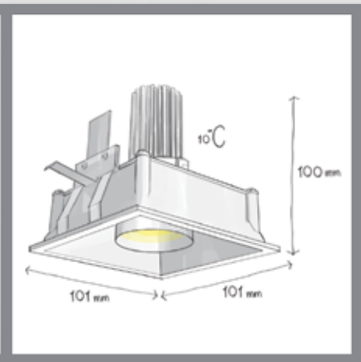

CODE	F120
Light source	LED
Power (W)	9
luminous flux (lm)	990
Color Rendering (Ra)	>80
Color Temperature (K)	3000 | 4000*
Body Color	White | Black*

IP 20

95X95mm
113X113 mm
(Trimless Version)

0.61 (GU10: 0.53)

20 x 16 x 12.3

Supply Voltage:
220-240 Vac,50Hz
Recommended Applications:
Residential | Office | Shop

▲ Aban Residential 2019 / Architect: Gozar Andishe JTI office / Architect: Persian Garden Studio ▼

Tiran S

Light distributions

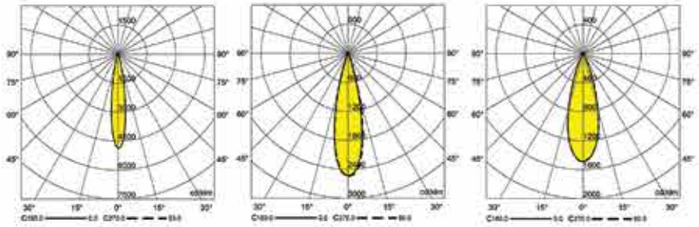

Spot(S) SpotMedium(SM) Medium(M)

Accessories

Optional

LED GU10 Lamp
Order code: 10020101

Optional

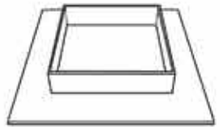

Recessed Kit
Order code: 2120924125

Order code table

Body Color	3000K	Beam Angle	4000K	Body Color
White	F120W930S	Spot	F120W940S	White
	F120W930SM	Spot Medium	F120W940SM	
	F120W930M	Medium	F120W940M	

Body Color	3000K	Beam Angle	4000K	Body Color
Black	F120B930S	Spot	F120B940S	Black
	F120B930SM	Spot Medium	F120B940SM	
	F120B930M	Medium	F120B940M	

Order code for GU10 Version**

Body Color	Body Code	Body Code	Body Color
White	F122WG	F122BG	Black

*Customized body colors and other color temperatures (CCTs) are available upon request
**Lamp is not Included

Aban Residential / Architect Gozar Andishe

Tiran S Trimless

Light distributions

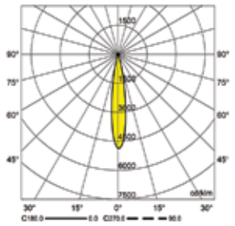

Spot(S)

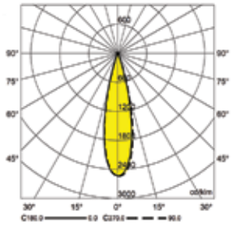

SpotMedium(SM)

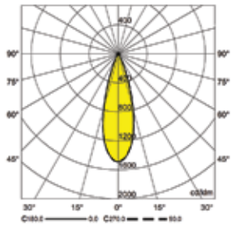

Medium(M)

Accessories

Optional

LED GU10 Lamp
Order code: 10020101

Mandatory

Trimless Installation Kit
Order code: 2099924117

For Trimless Version Only

Order code table

Body Color	3000K	Beam Angle	4000K	Body Color
White	F121W930S	Spot	F121W940S	White
	F121W930SM	Spot Medium	F121W940SM	
	F121W930M	Medium	F121W94 0M	

Body Color	3000K	Beam Angle	4000K	Body Color
Black	F121B930S	Spot	F121B940S	Black
	F121B930SM	Spot Medium	F121B940SM	
	F121B930M	Medium	F121B940M	

Order code for GU10 Version**

Body Color	Body Code	Body Code	Body Color
White	F126WG	F126BG	Black

*Customized body colors and other color temperatures (CCTs) are available upon request
**Lamp is not Included

Fitran Q

Ceiling Recessed

Fitran Q

Ceiling Recessed

Trimless Version

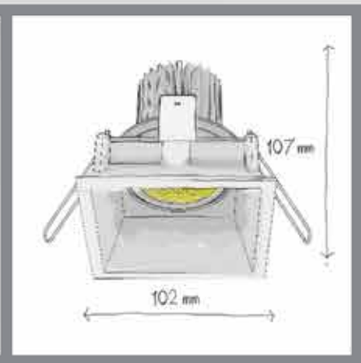

CODE	F119
Light source	LED
Power (W)	12
luminous flux (lm)	1300
Color Rendering (Ra)	>80
Color Temperature (K)	3000 | 4000*
Body Color	White | Black*

IP 20

95X95mm
113X113 mm
(Trimless Version)

0.58 (GU10: 0.42) (Kg)

For GU10 Version

20 x 16 x 12.3 (Cm)

Supply Voltage:
220-240 Vac,50Hz

Recommended Applications:
Residential | Office | Shop

▲ JTI Office / Architect: Persian Garden 2019 ▼

Fitran Q

Light distributions

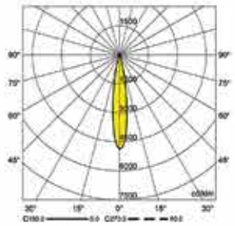

Spot(S)

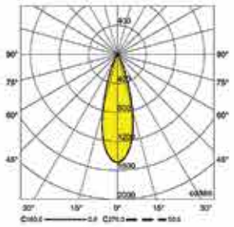

Medium(M)

Accessories

Optional

LED GU10 Lamp
Order code: 10020101

Mandatory

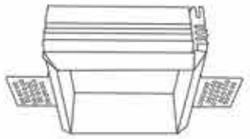

Trimless Installation Kit
Order code: 2099924117
For Trimless Version Only

Optional

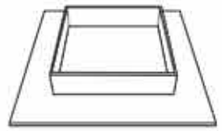

Recessed Kit
Order code: 2119924125

Order code table

Body Color	3000K	Beam Angle	4000K	Body Color
White	F119W1230S	Spot	F119W1240S	White
	F119W1230M	Medium	F119W1240M	

Body Color	3000K	Beam Angle	4000K	Body Color
Black	F119B1230S	Spot	F119B1240S	Black
	F119B1230M	Medium	F119B1240M	

Trimless version Order code table

Body Color	3000K	Beam Angle	4000K	Body Color
White	F129W1230S	Spot	F129W1240S	White
	F129W1230M	Medium	F129W1240M	

Body Color	3000K	Beam Angle	4000K	Body Color
Black	F129B1230S	Spot	F129B1240S	Black
	F129B1230M	Medium	F129B1240M	

Order code for GU10 Version**

Body Color	Body Code	Body Code	Body Color
White	F119WG	F119BG	Black

Order code for Trimless GU10 Version**

Body Color	Body Code	Body Code	Body Color
White	F129WG	F129BG	Black

*Customized body colors and other color temperatures (CCTs) are available upon request
**Lamp is not Included

Roni WW

Ceiling Recessed

Roni WW is the wallwasher version of Roni family. It provides a uniform illumination on the wall surface, a perfect solution for highlighting architectural features of a building as well as lighting of galleries and museums. It's special design, makes the glare as low as possible.

Roni WW

Ceiling Recessed

Trimless Version

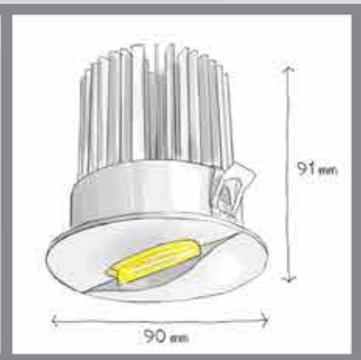

CODE	F185
Light source	LED
Power (W)	12
luminous flux (lm)	1300
Color Rendering (Ra)	>80
Color Temperature (K)	3000 | 4000*
Body Color	White*

IP 20 84mm

0.59 (Kg)

20 x 16 x 12.3 (Cm)

Supply Voltage:
220-240 Vac,50Hz

Recommended Applications:
Residential | Office | Shop | Gallery
Museum

▼ 8 West-Canada / Designed & built by Kipp Design + Build Dorin Ston / Architect: Arschiform Architect 2019 ▲

Roni WW

Light distributions

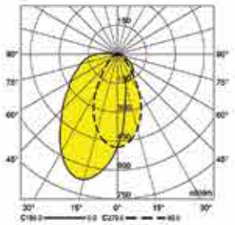

Wallwasher(WW)

Accessories

Optional

Trimless Installation Kit
Order code: 2185924111
For Trimless Installation

Optional

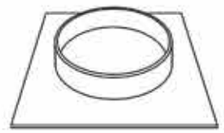

Recessed Kit
Order code: 2185924125

Order code table

Body Color	3000K	Beam Angle	4000K	Body Color
White	F185W1230WW	Wallwasher	F185W1240WW	White

*Customized body colors and other color temperatures (CCTs) are available upon request

Roni
Ceiling Recessed

Oval

Roni

Ceiling Recessed

Double Wash

Wide

Spot

CODE	F185
Light source	LED
Power (W)	12
luminous flux (lm)	1300
Color Rendering (Ra)	>80
Color Temperature (K)	3000 | 4000*
Body Color	White*

IP 40 84mm

0.59 (Kg)

20 x 16 x 12.3 (Cm)

Supply Voltage:
220-240 Vac,50Hz
Recommended Applications:
Residential | Office | Shop

▲Roni W

▲Roni S

▲Roni DW

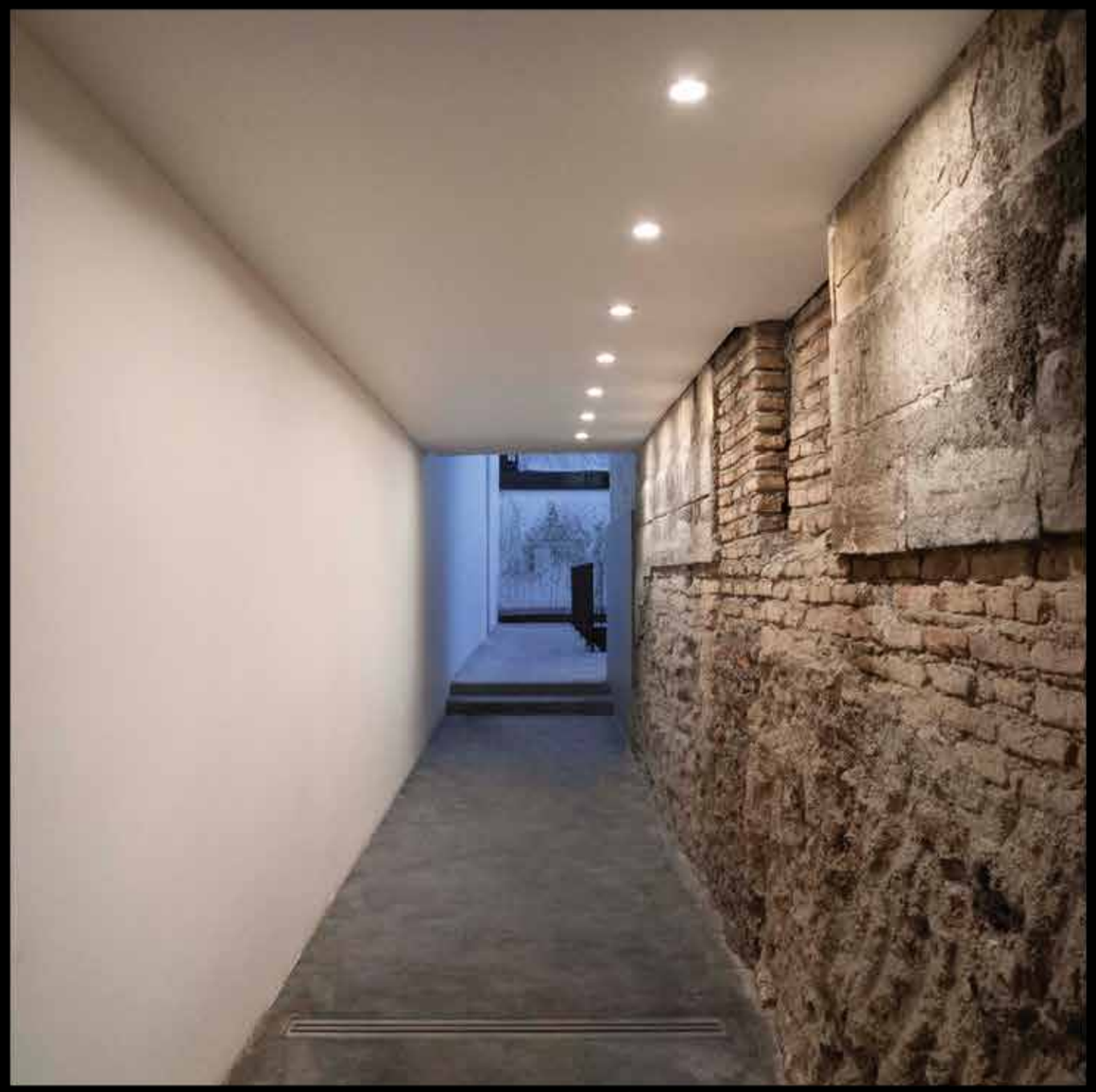

▲ Hana Boutique Hotel / Architect: Persian Garden 2018

Roni

Light distributions

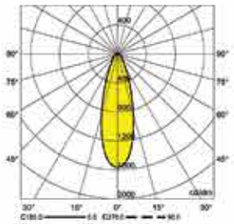

Spot(S)

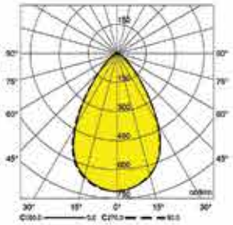

Wide(W)

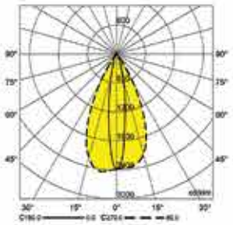

DoubleWash(DW)

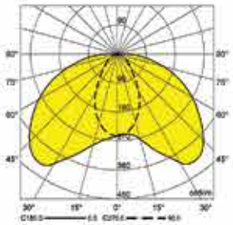

Oval(O)

Accessories

Optional

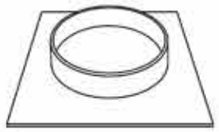

TRecessed Kit
Order code: 2185924125

Order code table

Body Color	3000K	Beam Angle	4000K	Body Color
White	F185W1230S	Spot	F185W1240S	White
	F185W1230W	Wide	F185W1240W	
	F185W1230O	Oval	F185W1240O	
	F185W1230DW	DoubleWash	F185W1240DW	

*Customized body colors and other color temperatures (CCTs) are available upon request

Valman

Ceiling Recessed

Vertical illumination is becoming more and more important for architects and lighting designers.
It is important for architects because it reveals the feel of the space, and helps the place to become even more inviting. It is important for shop owners because it makes the shop become more visible and appear brighter from outside. In an office it helps to provide better visual comfort.

Valman

Ceiling Recessed

CODE	F160
Light source	LED
Power (W)	30
luminous flux (lm)	3400
Color Rendering (Ra)	>80
Color Temperature (K)	3000 | 4000*
Body Color	White*

IP 20 125mm

1.10 (Kg)

28 x 25 x 17 (Cm)

Supply Voltage:
220-240 Vac,50Hz
Recommended Applications:
Office | Shop

Car Showroom
Architect: Persian Garden 2017

Baguette Restaurant
Architect: Parsa Ardam
& Ramin Beyraghdar 2017

Light distributions

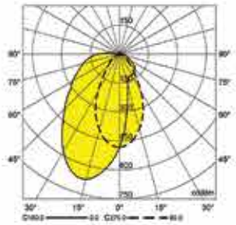

Wallwasher(WW)

Accessories

Optional

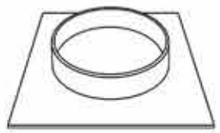

Trimless Installation Kit
Order code: 2160924125

Order code table

Body Color	3000K	Beam Angle	4000K	Body Color
White	F160W3030WW	Wallwasher	F160W3040WW	White

*Customized body colors and other color temperatures (CCTs) are available upon request

NATLI Confectionary / Architect: Parsa Ardam & Ramin Beyraghdar 2018

Track Light

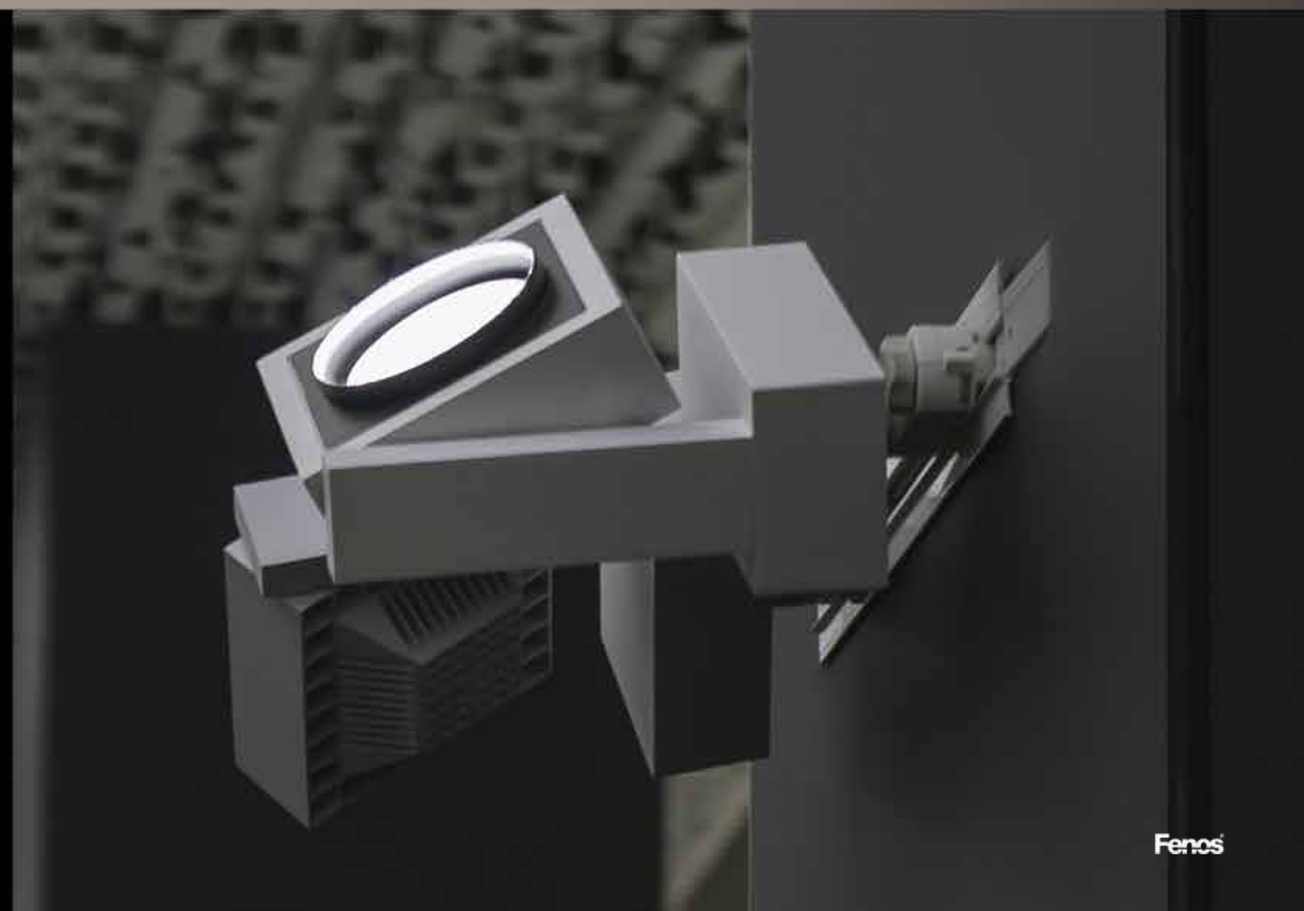

Belta

Track Light

Honorable Mention
EUROPEAN PRODUCT DESIGN AWARD™

Elegant Design, fascinating surface treatment
European Product Design Award 2020

Belta

Track Light

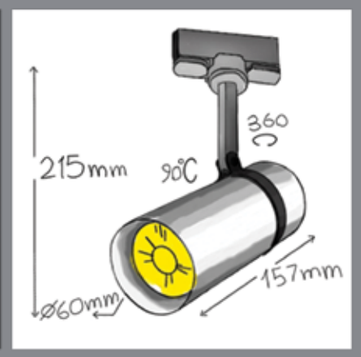

CODE	F390
Light source	LED
Power (W)	12
luminous flux (lm)	1300 | 1320
Color Rendering (Ra)	>80
Color Temperature (K)	3000 | 4000*
Body Color	White | Black | Brushed Copper Brushed Gold | Brushed Alu*

IP 20

0.74 (Kg)

20 x 16 x 12.3 (Cm)

Supply Voltage:
220-240 Vac,50Hz

Recommended Applications:
Residential | Office | Shop | Gallery
Museum

Belta

Light distributions

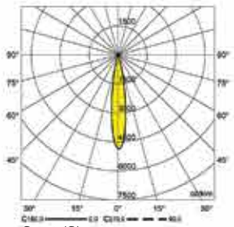
Spot (S)

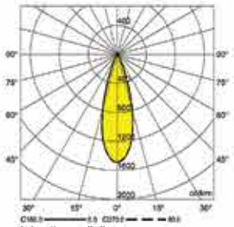
Medium (M)

Accessories

Track

Refer to page 194

Order code table

Body Color	3000K	Beam Angle	4000K	Body Color
White	F390W1230S	Spot	F390W1240S	White
	F390W1230M	Medium	F390W1240M	

Body Color	3000K	Beam Angle	4000K	Body Color
Black	F390B1230S	Spot	F390B1240S	Black
	F390B1230M	Medium	F390B1240M	

Body Color	3000K	Beam Angle	4000K	Body Color
Brushed Copper	F390BC1230S	Spot	F390BC1240S	Brushed Copper
	F390BC1230M	Medium	F390BC1240M	

Body Color	3000K	Beam Angle	4000K	Body Color
Brushed Gold	F390BG1230S	Spot	F390BG1240S	Brushed Gold
	F390BG1230M	Medium	F390BG1240M	

Body Color	3000K	Beam Angle	4000K	Body Color
Brushed Alu	F390BA1230S	Spot	F390BA1240S	Brushed Alu
	F390BA1230M	Medium	F390BA1240M	

*Customized body colors and other color temperatures (CCTs) are available upon request

Merbo Mini

Track Light

Merbo Mini

Track Light

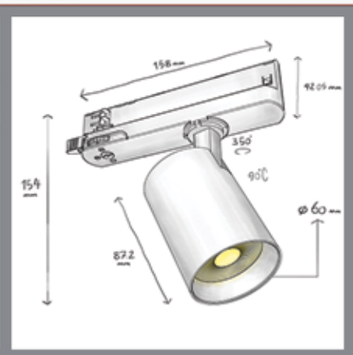

CODE	F343
Light source	LED
Power (W)	12
luminous flux (lm)	1300 | 1320
Color Rendering (Ra)	>80
Color Temperature (K)	3000 | 4000*
Body Color	White | Black | Brushed Copper Brushed Gold | Brushed Alu*

IP 20 — 60 mm (For RA Version)

0.46 (Kg)

20 x 16 x 12.3 (Cm)

Supply Voltage:
220-240 Vac,50Hz
Recommended Applications:
Office | Shop

Merbo Mini

Light distributions

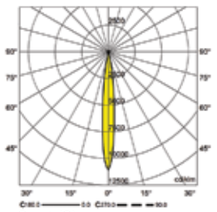
Spot (S)

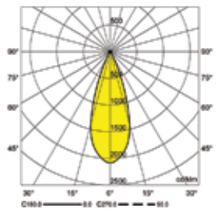
Medium (M)

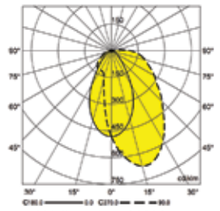
Wallwasher (WW)

Accessories

Track

Order code table

Body Color	3000K	Beam Angle	4000K	Body Color
White	F340W1230S	Spot	F340W1240S	White
	F340W1230M	Medium	F340W1240M	
	F340W1230WW	Wallwsher	F340W1240WW	

Body Color	3000K	Beam Angle	4000K	Body Color
Black	F340B1230S	Spot	F340B1240S	Black
	F340B1230M	Medium	F340B1240M	
	F340B1230WW	Wallwsher	F340B1240WW	

Body Color	3000K	Beam Angle	4000K	Body Color
Brushed Copper	F340BC1230S	Spot	F340BCB1240S	Brushed Copper
	F340BC1230M	Medium	F340BC1240M	
	F340BC1230WW	Wallwsher	F340BC1240WW	

Body Color	3000K	Beam Angle	4000K	Body Color
Brushed Gold	F340BG1230S	Spot	F340BG1240S	Brushed Gold
	F340BG1230M	Medium	F340BG1240M	
	F340BG1230WW	Wallwsher	F340BG1240WW	

Body Color	3000K	Beam Angle	4000K	Body Color
Brushed Alu	F340BA1230S	Spot	F340BA1240S	Brushed Alu
	F340BA1230M	Medium	F340BA1240M	
	F340BA1230WW	Wallwsher	F340BA1240WW	

*Customized body colors and other color temperatures (CCTs) are available upon request

Merbo Midi

Track Light

Merbo Midi

Track Light

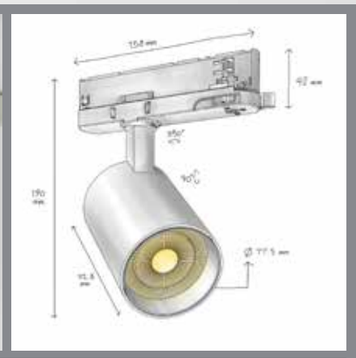

CODE	F346
Light source	LED
Power (W)	20
luminous flux (lm)	3200
Color Rendering (Ra)	>92
Color Temperature (K)	3000 | 4000*
Body Color	White | Black

IP 20 78 mm (For RA Version)

KG 1.92(Kg)

20 x 16 x 12.3 (Cm)

Supply Voltage:
220-240 Vac,50Hz

Recommended Applications:
Office | Commercial Center
Residential | Shop

Merbo Midi

Light distributions

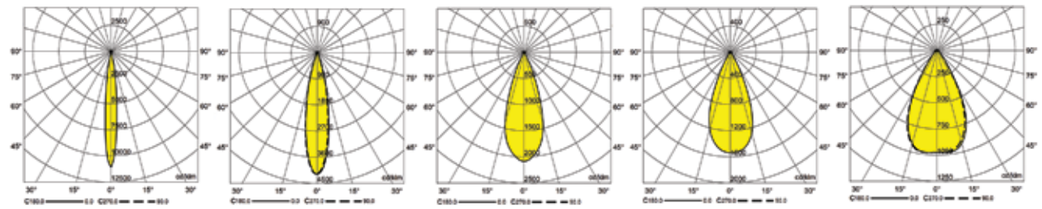

Spot (S) | Spot-Medium (SM) | Medium (M) | Medium Wide (MW) | Wide (W)

Accessories

Track

Order code table

Body Color	3000K	Beam Angle	4000K	Body Color
White	F346W2030S	Spot	F346W2040S	White
	F346W2030SM	Spot Medium	F346W2040SM	
	F346W2030M	Medium	F346W2040M	
	F346W2030MW	Medium Wide	F346W2040MW	
	F346W2030W	Wide	F346W2040W	

Body Color	3000K	Beam Angle	4000K	Body Color
Black	F346B2030S	Spot	F346B2040S	Black
	F346B2030SM	Spot Medium	F346B2040SM	
	F346B2030M	Medium	F346B2040M	
	F346B2030MW	Medium Wide	F346B2040MW	
	F346B2030W	Wide	F346B2040W	

*Customized body colors and other color temperatures (CCTs) are available upon request

Felka Mini

Track Light

9 Different light distributions for almost all applications

Felka Mini

Track Light

Felka Mini WW

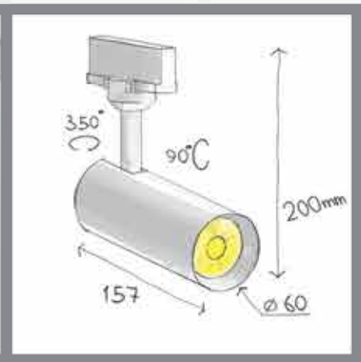

CODE	F315
Light source	LED
Power (W)	12
luminous flux (lm)	1300 | 1320
Color Rendering (Ra)	>80
Color Temperature (K)	3000 | 4000*
Body Color	White | Black*

IP 20 54mm (For RA Version)

0.73 (Kg)

20 x 16 x 12.3 (Cm)

Supply Voltage:
220-240 Vac,50Hz
Recommended Applications:
Residential | Office | Shop | Gallery
Museum

▲Carpet Gallery ASP Residential / Architect: Gozar Andisheh 2018 ▼

Felka Mini

Light distributions

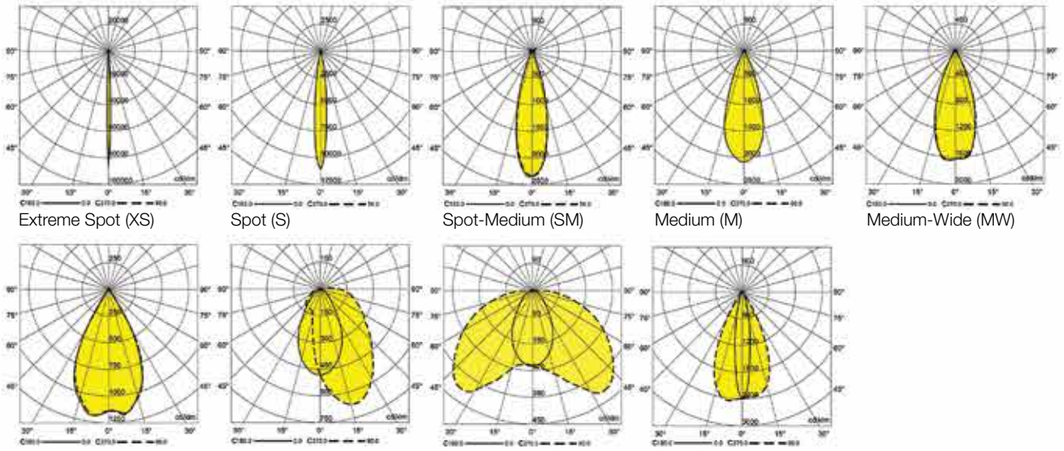

Accessories

Track

Refer to page 194

Order code table

Body Color	3000K	Beam Angle	4000K	Body Color
White	F315W1230XS	Extreme Spot	F315W1240XS	White
	F315W1230S	Spot	F315W1240S	
	F315W1230SM	Spot Medium	F315W1240SM	
	F315W1230M	Medium	F315W1240M	
	F315W1230MW	Medium Wide	F315W1240MW	
	F315W1230W	Wide	F315W1240W	
	F315W1230WW	Wallwasher	F315W1240WW	
	F315W1230DW	Double Wash	F315W1240DW	
	F315W1230O	Oval	F315W1240O	

Body Color	3000K	Beam Angle	4000K	Body Color
Black	F315B1230XS	Extreme Spot	F315B1240XS	Black
	F315B1230S	Spot	F315B1240S	
	F315B1230SM	Spot Medium	F315B1240SM	
	F315B1230M	Medium	F315B1240M	
	F315B1230MW	Medium Wide	F315B1240MW	
	F315B1230W	Wide	F315B1240W	
	F315B1230WW	Wallwasher	F315B1240WW	
	F315B1230DW	Double Wash	F315B1240DW	
	F315B1230O	Oval	F315B1240O	

*Customized body colors and other color temperatures (CCTs) are available upon request

Felka Mini

Track Light

Felka Mini RA

Ceiling Recessed

Order code table

Body Color	3000K	Beam Angle	4000K	Body Color
White	F324W1230S	Spot	F324W1240S	White
	F324W1230M	Medium	F324W1240M	
	F324W1230WW	Wallwasher	F324W1240WW	
Black	F324B1230S	Spot	F324B1240S	Black
	F324B1230M	Medium	F324B1240M	
	F324B1230WW	Wallwasher	F324B1240WW	

Felka Mini SA

Surface Mounted

Order code table

Body Color	3000K	Beam Angle	4000K	Body Color
White	F318W1230S	Spot	F318W1240S	White
	F318W1230M	Medium	F318W1240M	
	F318W1230WW	Wallwasher	F318W1240WW	
Black	F318B1230S	Spot	F318B1240S	Black
	F318B1230M	Medium	F318B1240M	
	F318B1230WW	Wallwasher	F318B1240WW	

Felka Mini S

Surface Mounted

Order code table

Body Color	3000K	Beam Angle	4000K	Body Color
White	F317W1230S	Spot	F317W1240S	White
	F317W1230M	Medium	F317W1240M	
Black	F317B1230S	Spot	F317B1240S	Black
	F317B1230M	Medium	F317B1240M	

Felka Mini P

Surface Mounted

Order code table

Body Color	3000K	Beam Angle	4000K	Body Color
White	F319W1230S	Spot	F319W1240S	White
	F319W1230M	Medium	F319W1240M	
Black	F319B1230S	Spot	F319B1240S	Black
	F319B1230M	Medium	F319B1240M	

Negarestan Garden

Hana Bouitque Hotel / Architect: Persian Garden Studio

Felka Midi

Track Light

Felka Midi

Track Light

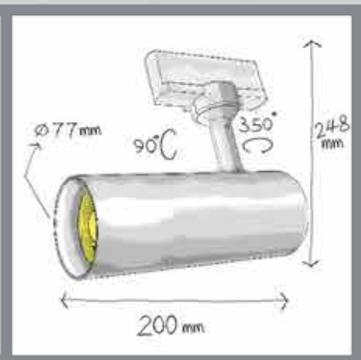

CODE	F325
Light source	LED
Power (W)	20
luminous flux (lm)	2200
Color Rendering (Ra)	>80
Color Temperature (K)	3000 | 4000*
Body Color	White | Black*

IP 20 78mm (For RA Version)

1.92 (Kg)

20 x 16 x 12.3 (Cm)

Supply Voltage:
220-240 Vac,50Hz

Recommended Applications:
Office | Commercial Center
Residential | Shop

▲ Cafe illy / Architect: Ehsan Mohajer 2017

Up Office / Architect: Persian Garden 2018 ▼

Felka Midi

Light distributions

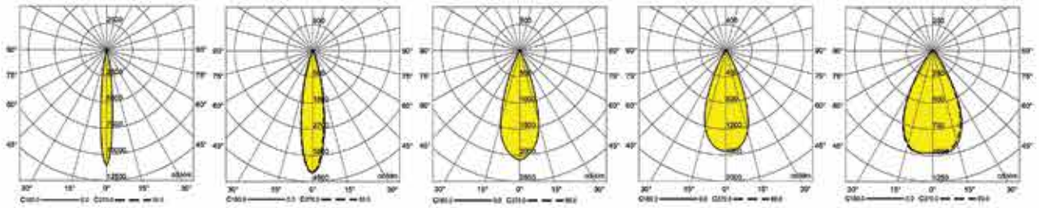

Spot (S) | Spot-Medium (SM) | Medium (M) | Medium Wide (MW) | Wide (W)

Accessories

Track

Refer to page 194

Order code table

Body Color	3000K	Beam Angle	4000K	Body Color
White	F325W2030S	Spot	F325W2040S	White
	F325W2030SM	Spot Medium	F325W2040SM	
	F325W2030M	Medium	F325W2040M	
	F325W2030MW	Medium Wide	F325W2040MW	
	F325W2030W	Wide	F325W2040W	

Body Color	3000K	Beam Angle	4000K	Body Color
Black	F325B2030S	Spot	F325B2040S	Black
	F325B2030SM	Spot Medium	F325B2040SM	
	F325B2030M	Medium	F325B2040M	
	F325B2030MW	Medium Wide	F325B2040MW	
	F325B2030W	Wide	F325B2040W	

*Customized body colors and other color temperatures (CCTs) are available upon request

Felka Midi

Track Light

Felka Midi RA

Ceiling Recessed

Order code table

Body Color	3000K	Beam Angle	4000K	Body Color
White	F329W2030S	Spot	F329W2040S	White
	F329W2030M	Medium	F329W2040M	
	F329W2030W	Wide	F329W2040W	
Black	F329B2030S	Spot	F329B2040S	Black
	F329B2030M	Medium	F329B2040M	
	F329B2030W	Wide	F329B2040W	

Felka Midi SA

Surface Mounted

Order code table

Body Color	3000K	Beam Angle	4000K	Body Color
White	F328W2030S	Spot	F328W2040S	White
	F328W2030M	Medium	F328W2040M	
	F328W2030W	Wide	F328W2040W	
Black	F328B2030S	Spot	F328B2040S	Black
	F328B2030M	Medium	F328B2040M	
	F328B2030W	Wide	F328B2040W	

Felka Midi S

Surface Mounted

Order code table

Body Color	3000K	Beam Angle	4000K	Body Color
White	F327W2030S	Spot	F327W2040S	White
	F327W2030M	Medium	F327W2040M	
Black	F327B2030S	Spot	F327B2040S	Black
	F327B2030M	Medium	F327B2040M	

Felka Midi P

Surface Mounted

Order code table

Body Color	3000K	Beam Angle	4000K	Body Color
White	F326W2030S	Spot	F326W2040S	White
	F326W2030M	Medium	F326W2040M	
Black	F326B2030S	Spot	F326B2040S	Black
	F326B2030M	Medium	F326B2040M	

Hana Bouitque Hotel / Architect: Persian Garden Studio ▲

▼ Argo Factory / Architect: Ahmad Reza Shereker

▲ Argo Factory / Architect: Ahmad Reza Shereker ▼

Felka Maxi

Track Light

For Retail and High Ceiling Applicaitons

Felka Maxi

Track Light

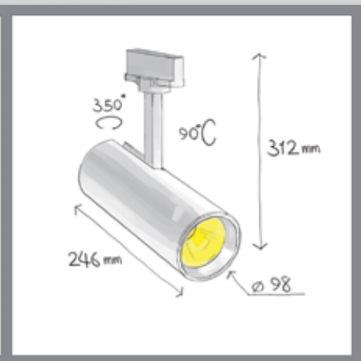

CODE	F316
Light source	LED
Power (W)	30
luminous flux (lm)	3300
Color Rendering (Ra)	>80
Color Temperature (K)	3000 | 4000*
Body Color	White | Black*

IP 20 100mm (For RA Version)

2.08 (Kg)

28 x 25 x 17 (Cm)

Supply Voltage:
220-240 Vac,50Hz
Recommended Applications:
Residential | Office | Shop

▲ Alibaba Centeral Office / Architect: Shift Process & Practice 2019 ▼

Felka Maxi

Light distributions

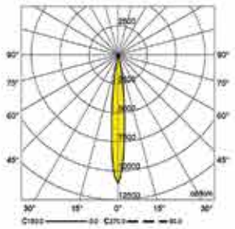

Spot (S)

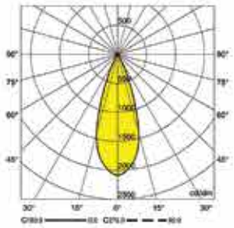

Medium (M)

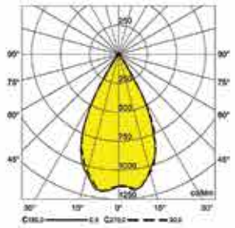

Wide (W)

Accessories

Track

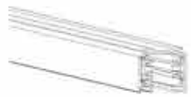

Refer to page 194

Order code table

Body Color	3000K	Beam Angle	4000K	Body Color
White	F316W3030S	Spot	F316W3040S	White
	F316W3030M	Medium	F316W3040M	
	F316W3030W	Wide	F316W3040W	

Body Color	3000K	Beam Angle	4000K	Body Color
Black	F316B3030S	Spot	F316B3040S	Black
	F316B3030M	Medium	F316B3040M	
	F316B3030W	Wide	F316B3040W	

*Customized body colors and other color temperatures (CCTs) are available upon request

Felka Maxi

Track Light

Felka Maxi RA

Ceiling Recessed

Order code table

Body Color	3000K	Beam Angle	4000K	Body Color
White	F323W3030S	Spot	F323W3040S	White
	F323W3030M	Medium	F323W3040M	
	F323W3030W	Wide	F323W3040W	
Black	F323B3030S	Spot	F323B3040S	Black
	F323B3030M	Medium	F323B3040M	
	F323B3030W	Wide	F323B3040W	

* Customized body color and other light colors are also available upon request

Felka Maxi S

Surface Mounted

Order code table

Body Color	3000K	Beam Angle	4000K	Body Color
White	F321W3030S	Spot	F321W3040S	White
	F321W3030M	Medium	F321W3040M	
Black	F321B3030S	Spot	F321B3040S	Black
	F321B3030M	Medium	F321B3040M	

* Customized body color and other light colors are also available upon request

Felka Maxi SA

Surface Mounted

Order code table

Body Color	3000K	Beam Angle	4000K	Body Color
White	F322W3030S	Spot	F322W3040S	White
	F322W3030M	Medium	F322W3040M	
	F322W3030W	Wide	F322W3040W	
Black	F322B3030S	Spot	F322B3040S	Black
	F322B3030M	Medium	F322B3040M	
	F322B3030W	Wide	F322B3040W	

* Customized body color and other light colors are also available upon request

Felka Maxi P

Surface Mounted

Order code table

Body Color	3000K	Beam Angle	4000K	Body Color
White	F320W3030S	Spot	F320W3040S	White
	F320W3030M	Medium	F320W3040M	
Black	F320B3030S	Spot	F320B3040S	Black
	F320B3030M	Medium	F320B3040M	

* Customized body color and other light colors are also available upon request

Argo Factory / Architect: Ahmad Reza Shreker

Aro
Track Light

Aro

Track Light

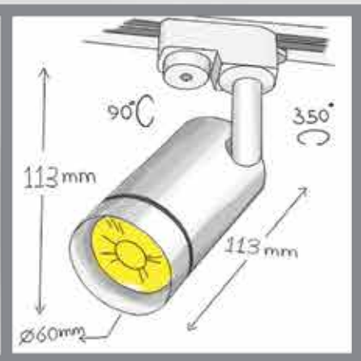

CODE	F330
Light source	LED
Power (W)	30
luminous flux (lm)	3300
Color Rendering (Ra)	>80
Color Temperature (K)	3000 | 4000*
Body Color	White | Black*

IP 20

0.46 (Kg)

17 x 13 x 9.3 (Cm)

Supply Voltage:
220-240 Vac,50Hz
Recommended Applications:
Office | Shop

▲ Cafe Bazar Head Office / Architect: Mohammad Khavari

Sabad Gardan / Architect: Persian Garden Studio ▼

Accessories

Optional

LED GU10 Lamp
Order code: 10020101

Track

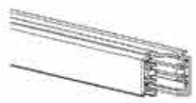

Refer to page 194

Order code for GU10 Version*

Body Color	Body Code	Body Code	Body Color
White	F330WG	F330BG	Black

Customize Color Available

*Customized body colors and other color temperatures (CCTs) are available upon request
**Lamp is not Included

Aro
Track Light

Aro RA
Ceiling Recessed

78mm

Order code table

Body Color			Body Color
White	F334WG	F334BG	Black

Aro SA
Surface Mounted

Order code table

Body Color			Body Color
White	F333WG	F333BG	Black

Aro S
Surface Mounted

Order code table

Body Color			Body Color
White	F331WG	F331BG	Black

Aro Midi P
Surface Mounted

Order code table

Body Color			Body Color
White	F332WG	F332BG	Black

▲ Sabad Gardan / Architect: Persian Garden Studio ▼

▲ Sabad Gardan / Architect: Persian Garden Studio ▼

Pelka

Track Light

For a Modern Architecture

Pelka

Track Light

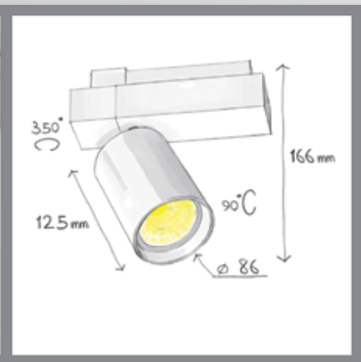

CODE	F310
Light source	LED
Power (W)	30
luminous flux (lm)	3300
Color Rendering (Ra)	>80
Color Temperature (K)	3000 | 4000*
Body Color	White | Black*

IP 20

1.15 (Kg)

28 x 25 x 17 (Cm)

Supply Voltage:
220-240 Vac,50Hz

Recommended Applications:
Residential | Office | Shop

▲Cafe Illy / Architact: Ehsan Mohajer 2017

Car Showroom / Architect: Persian Garden 2017 ▼

Pelka

Light distributions

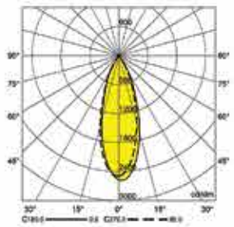

Spot (S)

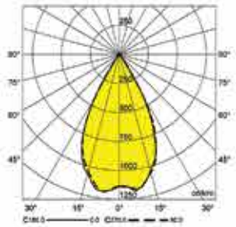

Wide (W)

Accessories

Track

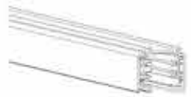

Refer to page 194

Order code table

Body Color	3000K	Beam Angle	4000K	Body Color
White	F310W3030S	Spot	F310W3040S	White
	F310W3030W	Wide	F310W3040W	

Body Color	3000K	Beam Angle	4000K	Body Color
Black	F310B3030S	Spot	F310B3040S	Black
	F310B3030W	Wide	F310B3040W	

*Customized body colors and other color temperatures (CCTs) are available upon request

Vera
Track Light

For Retail and High Ceiling Applicaitons

Vera

Track Light

CODE	F300
Light source	LED
Power (W)	35
luminous flux (lm)	3650
Color Rendering (Ra)	>80
Color Temperature (K)	3000 | 4000*
Body Color	White | Black*

IP 20

1.69 (Kg)

28 x 25 x 17 (Cm)

Supply Voltage:
220-240 Vac,50Hz
Recommended Applications:
Office | Shop | Museum

▲ Riwas Restaurant / Persian Garden 2016

Rosha Center / Architect: Dezhar Design Architects 2015 ▼

Light distributions

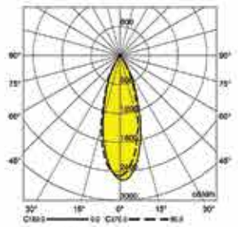

Spot (S)

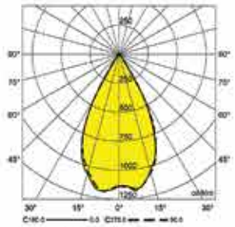

Wide (W)

Accessories

Track

Refer to page 194

Order code table

Body Color	3000K	Beam Angle	4000K	Body Color
White	F300W3530S	Spot	F300W3540S	White
	F300W3530W	Wide	F300W3540W	

Body Color	3000K	Beam Angle	4000K	Body Color
Black	F300B3530S	Spot	F300B3540S	Black
	F300B3530W	Wide	F300B3540W	

*Customized body colors and other color temperatures (CCTs) are available upon request

Vera Twin

Track Light

Powerful track light with low height and high flexibility in installation

Vera Twin

Track Light

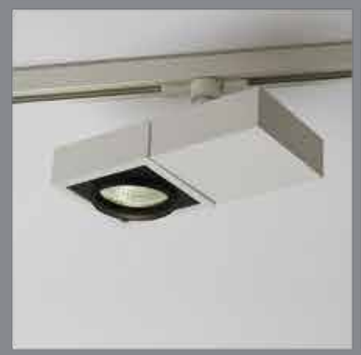

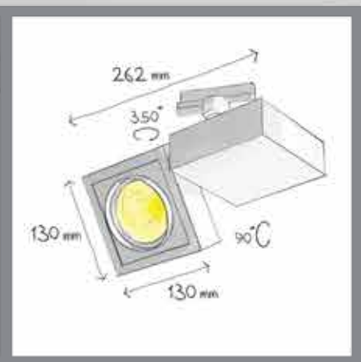

CODE	F305
Light source	LED
Power (W)	35
luminous flux (lm)	3850
Color Rendering (Ra)	>80
Color Temperature (K)	3000 | 4000*
Body Color	White | Black*

IP 20

KG 1.81 (Kg)

28 x 25 x 17 (Cm)

Supply Voltage:
220-240 Vac,50Hz

Recommended Applications:
Residential | Office | Shop

▼ Mitsubishi Showroom / Architect: Persian Garden 2016

Enjoy Life Mika Partner / Architect: Danial Jabbari & Shahab Alidoust 2018 ▲

Vera Twin

Light distributions

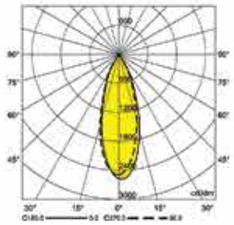

Spot (S)

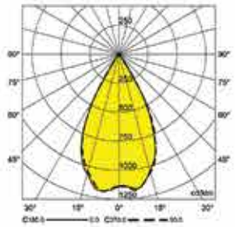

Wide (W)

Accessories

Track

Refer to page 194

Order code table

Body Color	3000K	Beam Angle	4000K	Body Color
White	F305W3530S	Spot	F305W3540S	White
	F305W3530W	Wide	F305W3540W	

Body Color	3000K	Beam Angle	4000K	Body Color
Black	F305B3530S	Spot	F305B3540S	Black
	F305B3530W	Wide	F305B3540W	

*Customized body colors and other color temperatures (CCTs) are available upon request

Sira S 1616

Profile

Very small and compact, suitable for many applications where size is limited

Sira S 1616

Profile

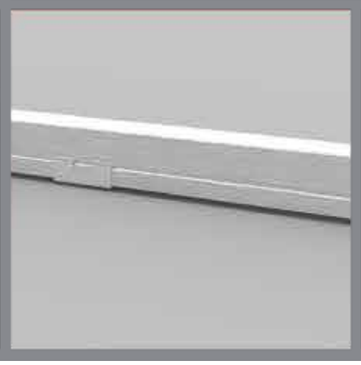

CODE	F466
Light source	LED
Body Color	White | Black | Silver*
Gross Weight (Kg)	1.13
Box Dimension (Cm)	127Ø x 100

IP 44

Recommended Applications:
Residential | Office | Shop

▲ Loutka Restaurant / Architect: Arsh 40 Studio 2019

Kafi Abadi Residential / Architect:Bonsar ▼

Sira S 1616

Light distributions

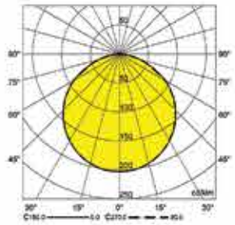

Wide (W)

Accessories

Surface Installation

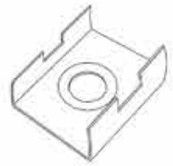

Sira S1616 Bracket

Optional

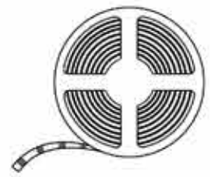

LED Strip
Refer to page 196

Optional

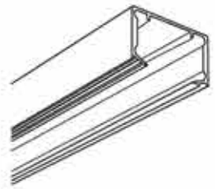

Krab
Refer to page 196

Order code table

Body Color	Order Code	Beam Angle
White	F466WW	Wide
Black	F466BW	Wide
Silver	F466SW	Wide

*Customized body colors and other color temperatures (CCTs) are available upon request

Sira R 1616

Profile

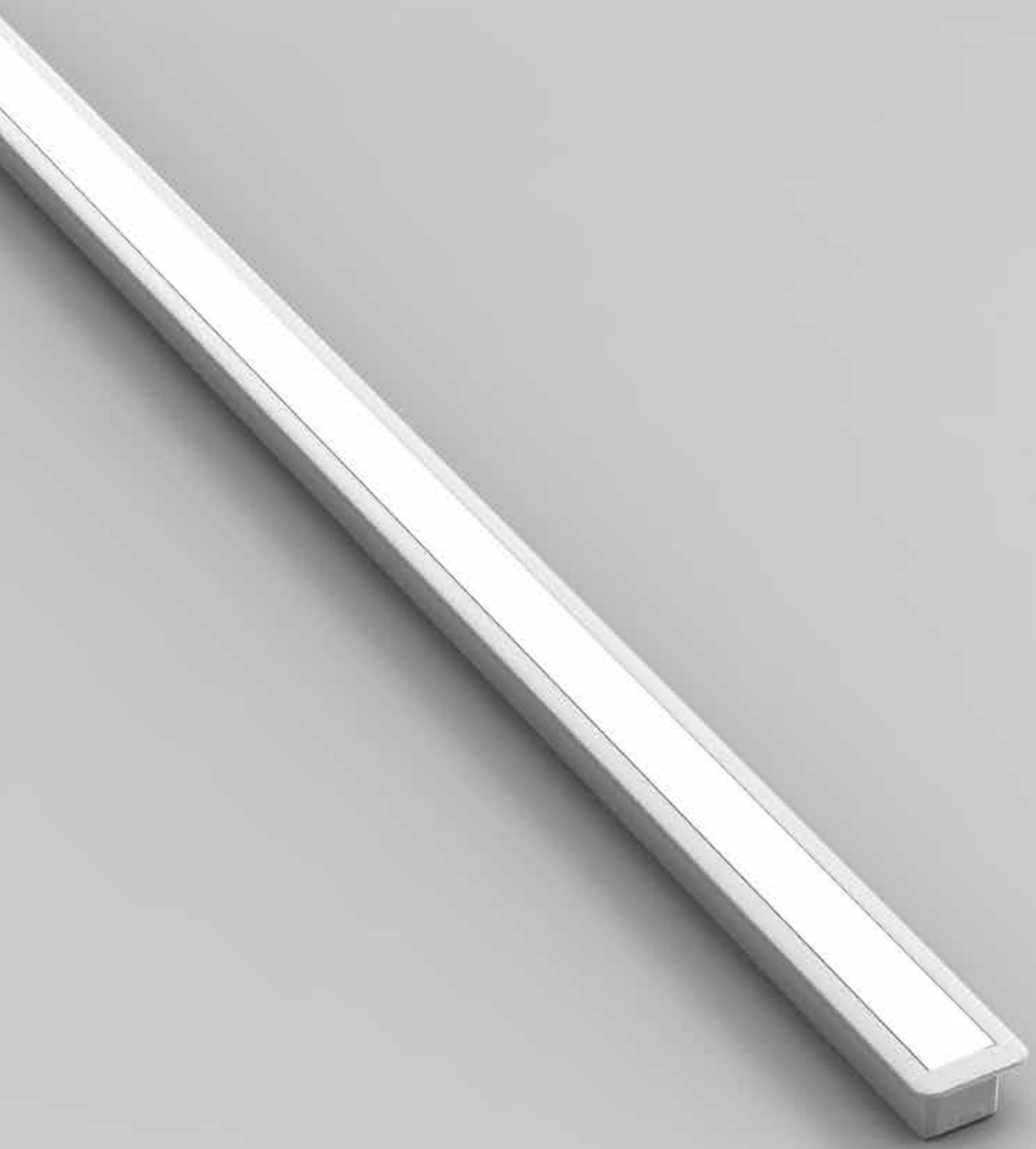

Very small and compact, suitable for recessed applications where size is limited such as shelf lighting.

Sira R 1616

Profile

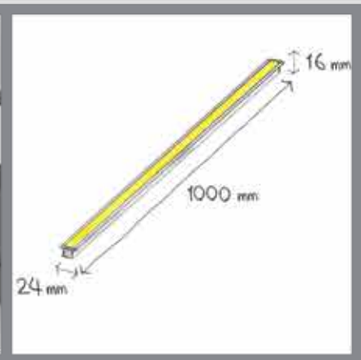

CODE	F467
Light source	LED
Body Color	White | Black | Silver*
Gross Weight (Kg)	1.16
Box Dimension (Cm)	127Ø x 100

IP 44 17mm

Recommended Applications:
Residential | Office | Shop

Aban Residential / Architect: Gozar Andisheh

Sira R 1616

Light distributions

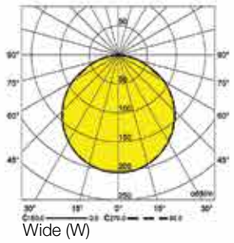

Wide (W)

Accessories

Recessed Installation

Sira R 1616 Bracket

Optional

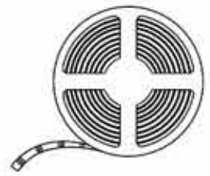

LED Strip
Refer to page 196

Order code table

Body Color	Order Code	Beam Angle
White	F467WW	Wide
Black	F467BW	Wide
Silver	F467SW	Wide

*Customized body colors and other color temperatures (CCTs) are available upon request

Sira OL

Recessed Linear

Very small and compact, suitable for many applications where size is limited

Sira OL

Profile

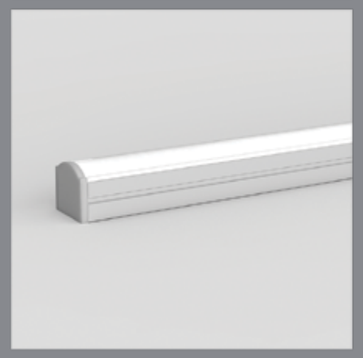

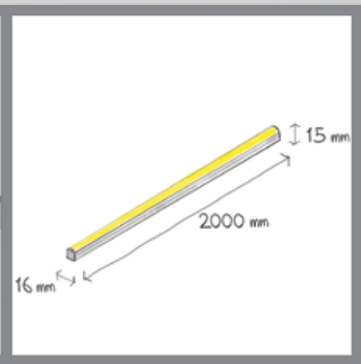

CODE	F470
Light source	LED
Body Color	Silver*
Gross Weight (Kg)	1.12
Box Dimension (Cm)	127Ø x 100

IP 65

Recommended Applications:
Residential | Office | Shop | Garden
Facade

▼ Runiran NATLI Confectionary / Architect: Parsa Ardam & Ramin Beyraghdar 2018 ▲

Sira OL

Light distributions

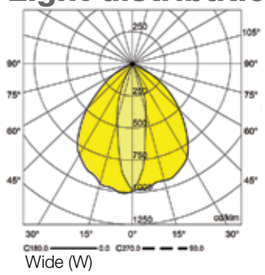

Wide (W)

Accessories

Surface Installation

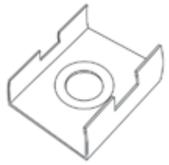

Sira OL Bracket

Optional

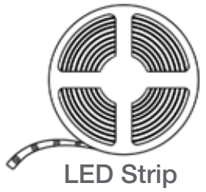

LED Strip
Refer to page 196

Order code table

Body Color	Order Code	Beam Angle
Silver	F470SW	Wide

*Customized body colors and other color temperatures (CCTs) are available upon request

Tavassoli Reseidential / Architect: Paradaim

Sira S 6090

Surface Linear

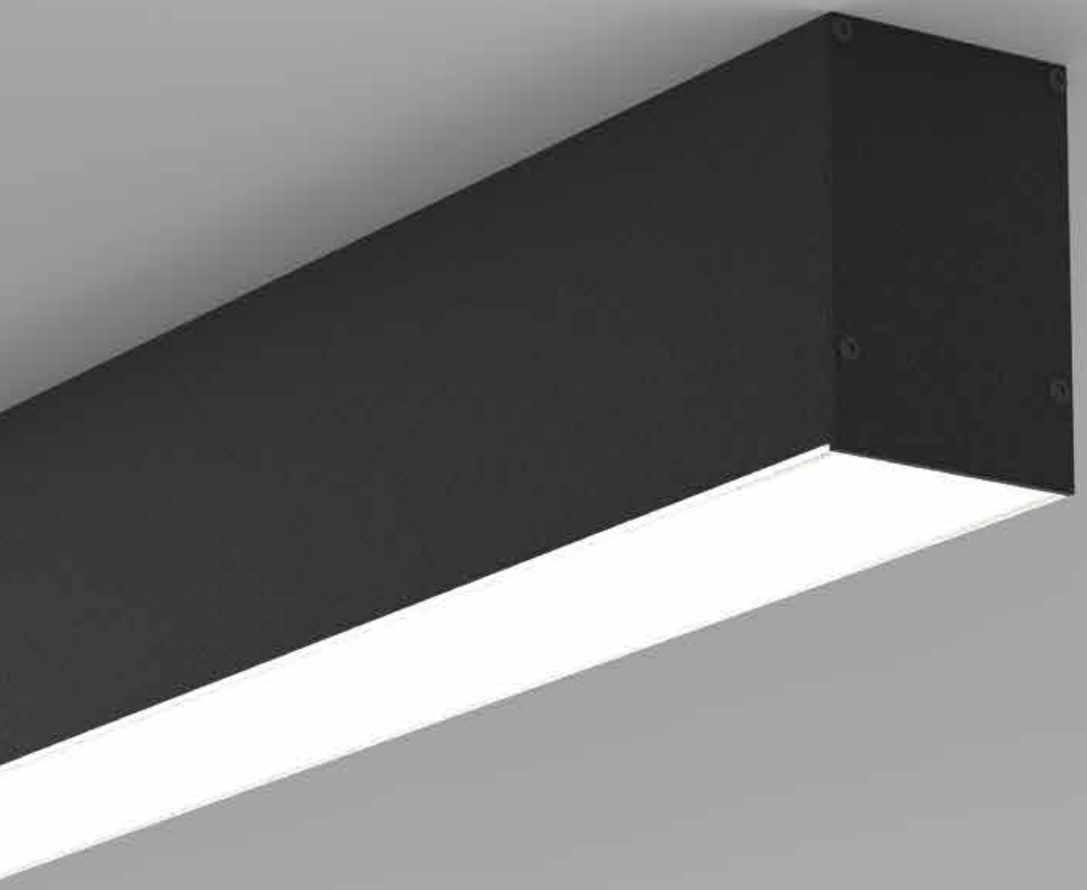

Continuous Linear light with 60 mm light emitting width

Sira S 6090

Surface Linear

Trimless Version

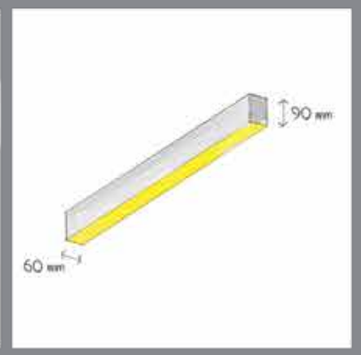

CODE	F451
Light source	LED
Power (W)	30 | 50*
luminous flux (lm)	4000
Color Rendering (Ra)	>80
Color Temperature (K)	3000 | 4000**
Body Color	White | Black**

IP 20

83mm (Trimless Version)

4.12 (Kg)

127Ø x 100 (Cm)

Supply Voltage:
220-240 Vac,50Hz

Recommended Applications:
Residential | Office | Shop

▲ JTI Office / Architect: Persian Garden 2018

Job Building / Architect: Mani Sadraei 2017 ▼

Sira S 6090

Light distributions

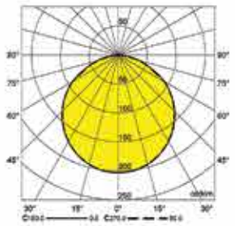

Wide (W)

Accessories

Optional

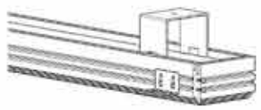

Trimless Installation Kit
Order code: 2451924125

For more details refer to installation details in our website

Optional

Solid Aluminium Cover
Order code:
White: 2451215106
Black: 2451115106

Order code table

Body Color	3000K	Length (cm)	4000K	Body Color
White	F451W3530W	114	F451W3540W	White
	F451W5030W	168	F451W5040W	

Body Color	3000K	Length (cm)	4000K	Body Color
Black	F451B3530W	114	F451B3540W	Black
	F451B5030W	168	F451B5040W	

The above order table code is for standard lengths of 114 and 168 cm. To oder other lenghts, than standard shapes, please refer to our sales support team to help you.

*Customized body colors and other color temperatures (CCTs) are available upon request

Sira P 6090

Pendant Linear

Continuous Linear light with 60 mm light emitting width

Sira P 6090

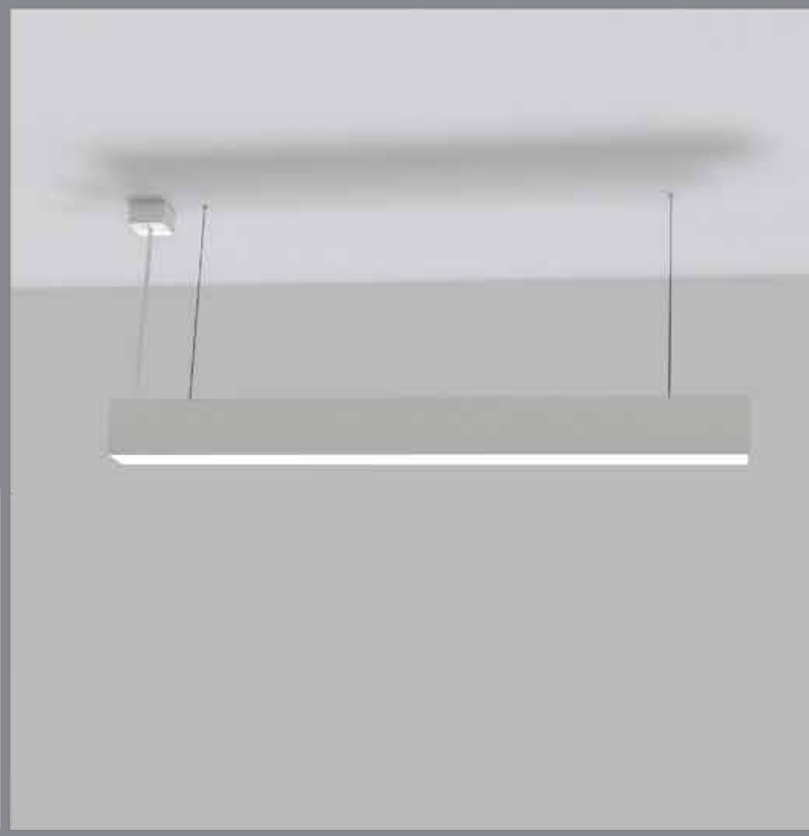

Pendant Linear

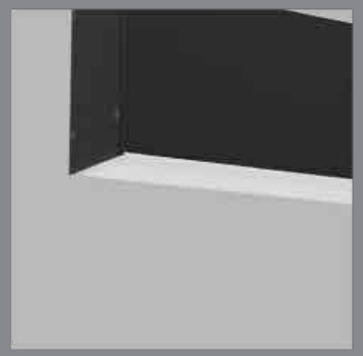

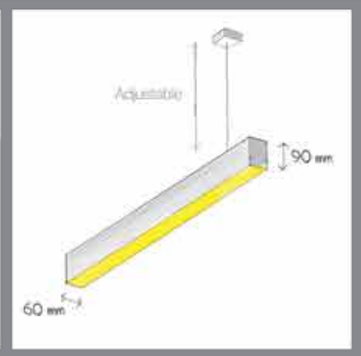

CODE	F453
Light source	LED
Power (W)	30 | 50*
luminous flux (lm)	4000
Color Rendering (Ra)	>80
Color Temperature (K)	3000 | 4000**
Body Color	White | Black**

*114Cm:35W | 168Cm:50W

IP 20

4.29 (Kg)

127Ø x 100 (Cm)

Supply Voltage:
220-240 Vac,50Hz

Recommended Applications:
Residential | Office | Shop

▲Sabad Gardan / Architect: Persian Garden Studio

Bazargan Kala co. office architects:Elham Ebrahimi,Mojtaba Mirhos ▼

Sira P 6090

Light distributions

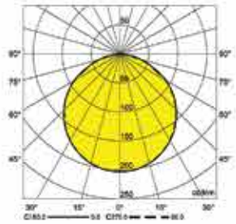

Wide (W)

Accessories

Optional

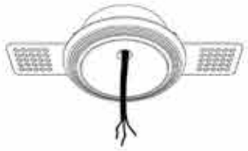

Trimless Cable Base
Order code: 2453224110

Optional

Solid Aluminium Cover
Order code:
White: 2451215106
Black: 2451115106

Order code table

Body Color	3000K	Length (cm)	4000K	Body Color
White	F453W3530W	114	F453W3540W	White
	F453W5030W	168	F453W5040W	

Body Color	3000K	Length (cm)	4000K	Body Color
Black	F453B3530W	114	F453B3540W	Black
	F453B5030W	168	F453B5040W	

The above order table code is for standard lengths of 114 and 168 cm. To oder other lenghts, than standard shapes, please refer to our sales support team to help you.

*Customized body colors and other color temperatures (CCTs) are available upon request

Cafe Bazar / Architect: Mohammad Khavarian

Sira R 6090

Recessed Linear

Continuous Linear light with 60 mm light emitting width

Sira R 6090

Recessed Linear

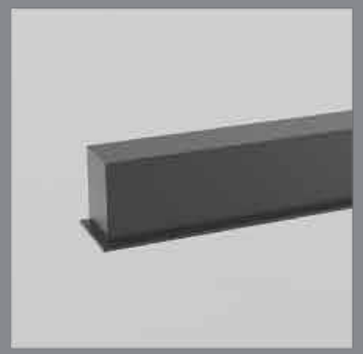

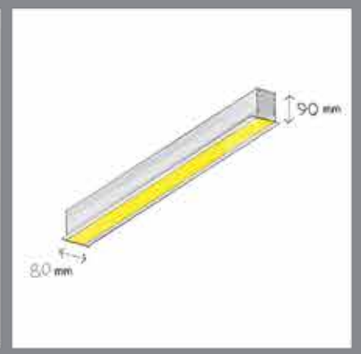

CODE	F452
Light source	LED
Power (W)	30 | 50*
luminous flux (lm)	4000
Color Rendering (Ra)	>80
Color Temperature (K)	3000 | 4000**
Body Color	White | Black**

*114Cm:35W | 168Cm:50W

IP 20 70mm

4.60 (Kg)

127Ø x 100 (Cm)

Supply Voltage:
220-240 Vac,50Hz
Recommended Applications:
Residential | Office | Shop

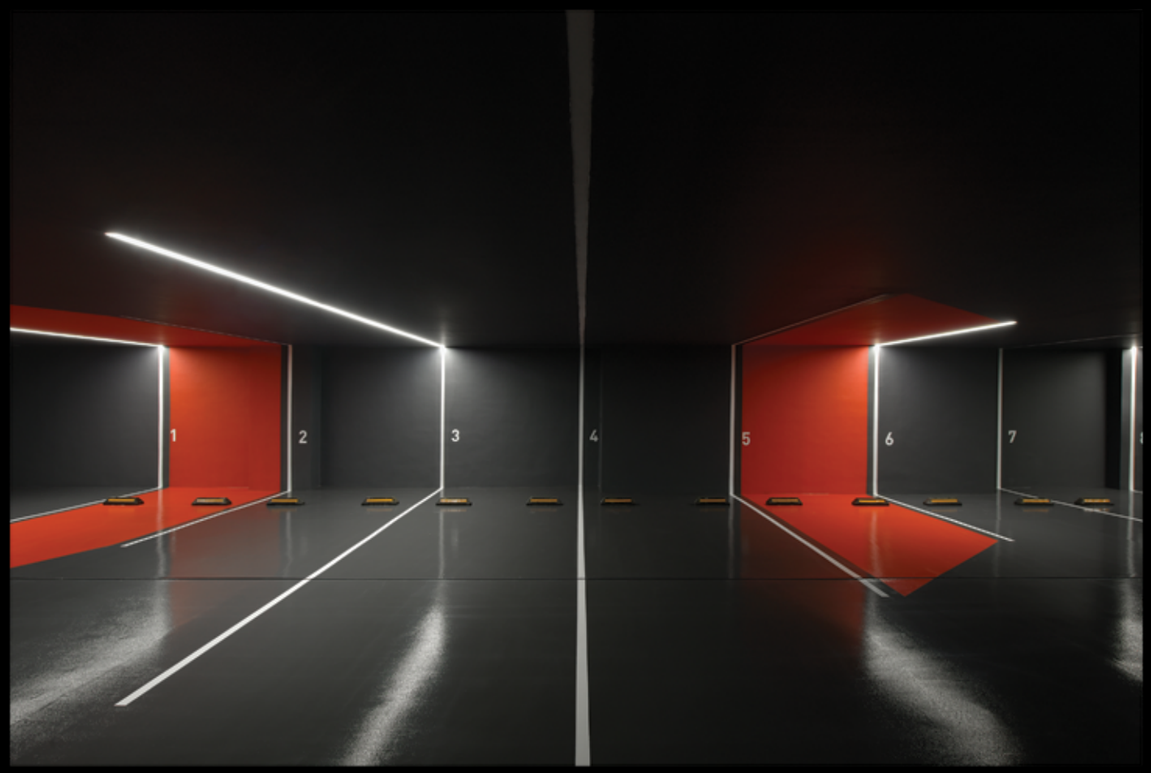

Kafi Abadi Residential / Architect: Bonsar Office

Sira R 6090

Light distributions

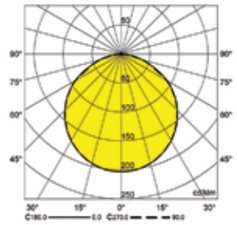

Wide (W)

Accessories

Optional

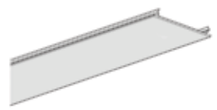

Solid Aluminium Cover
Order code:
White:2451215106
Black: 2451115106

Order code table

Body Color	3000K	Length (cm)	4000K	Body Color
White	F452W3530W	114	F452W3540W	White
	F452W5030W	168	F452W5040W	

Body Color	3000K	Length (cm)	4000K	Body Color
Black	F452B3530W	114	F452B3540W	Black
	F452B5030W	168	F452B5040W	

The above order table code is for standard lengths of 114 and 168 cm. To oder other lenghts, than standard shapes, please refer to our sales support team to help you.

*Customized body colors and other color temperatures (CCTs) are available upon request

Sira R 6040

Recessed Linear

Continuous Linear light with 60 mm light emitting width

Sira R 6040

Recessed Linear

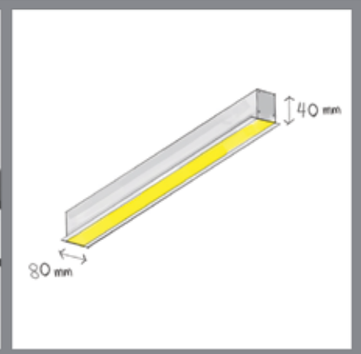

CODE	F403
Light source	LED
Power (W)	30
luminous flux (lm)	4000
Color Rendering (Ra)	>80
Color Temperature (K)	3000 | 4000*
Body Color	White | Black*

IP 20 70mm

3.02 (Kg)

127Ø x 100 (Cm)

Supply Voltage:
220-240 Vac,50Hz
Recommended Applications:
Residential | Office | Shop

Charima Office / Architect: Cando Archineering Group

Sira R 6040

Light distributions

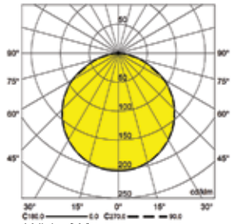

Wide (W)

Accessories

Optional

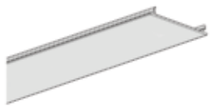

Solid Aluminium Cover
Order code:
White:2451215106
Black: 2451115106

Order code table

Body Color	3000K	Length (cm)	4000K	Body Color
White	F403W3530W	114	F403W3540W	White
	F403W5030W	168	F403W5040W	

Body Color	3000K	Length (cm)	4000K	Body Color
Black	F403B3530W	114	F403B3540W	Black
	F403B5030W	168	F403B5040W	

The above order table code is for standard lengths of 114 and 168 cm. To oder other lenghts, than standard shapes, please refer to our sales support team to help you.

*Customized body colors and other color temperatures (CCTs) are available upon request

Outdoor Lighting

Fenos products are used in several outdoor lighting projects.
Different products with different beam angles are available for professional applications like facade lighting or illumination of gardens.

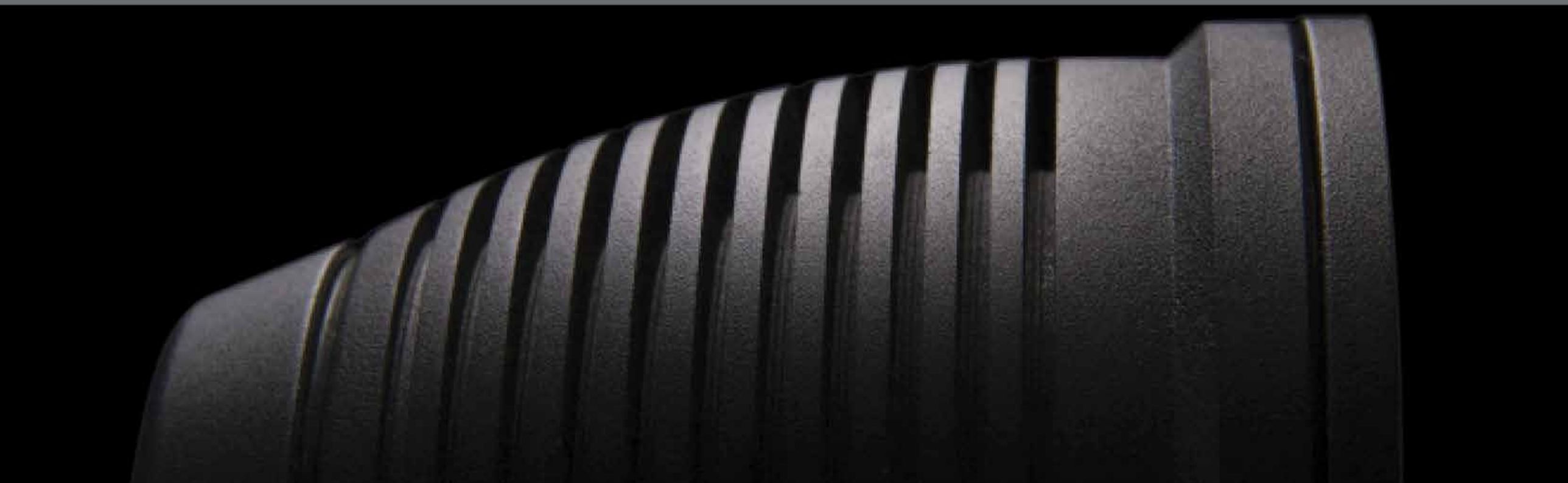

Silva Midi

Floor Surface

Silva Midi

Floor Surface

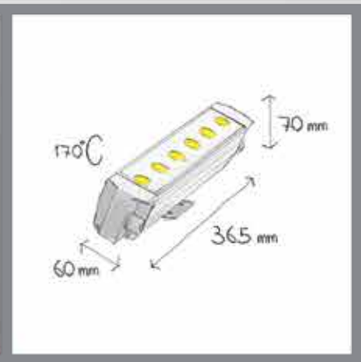

CODE	F920
Light source	LED
Power (W)	13
luminous flux (lm)	1400
Color Rendering (Ra)	>80
Color Temperature (K)	3000 | 4000*
Body Color	Silver*

IP 65

1.41 (Kg)

127Ø x 100 (Cm)

Supply Voltage:
220-240 Vac,50Hz

Recommended Applications:
Residential | Office | Shop
Facade Lighting

▲ Charsou / Architect: Bonsar Office 2014

Baguette Restaurant / Architect: Parsa Ardam & Ramin Beyraghdar ▼

Silva Midi

Light distributions

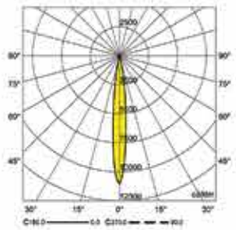

Spot(S)

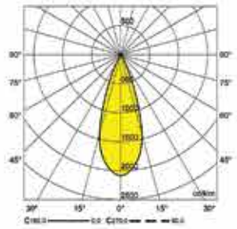

Medium(M)

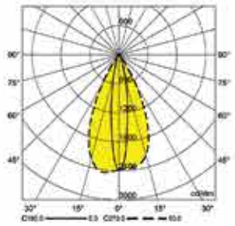

Oval(O)

Accessories

Order code table

Body Color	3000K	Beam Angle	4000K	Body Color
Silver	F920S1330S	Spot	F920S1340S	Silver
	F920S1330M	Medium	F920S1340M	
	F920S1330O	Oval	F920S1340O	

*Customized body colors and other color temperatures (CCTs) are available upon request

Silva Maxi

Floor Surface

Professional outdoor compact linear light with different light distributions

Silva Maxi

Floor Surface

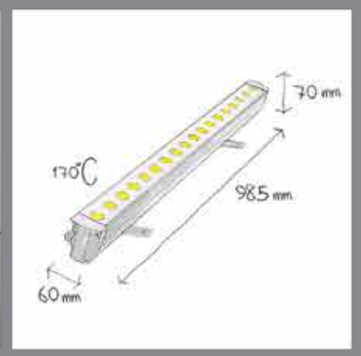

CODE	F925
Light source	LED
Power (W)	40
luminous flux (lm)	3240
Color Rendering (Ra)	>80
Color Temperature (K)	3000 | 4000*
Body Color	Silver*

IP 65

KG 3.18 (Kg)

127Ø x 100 (Cm)

Supply Voltage:
220-240 Vac,50Hz
Recommended Applications:
Residential | Office | Shop
Facade Lighting

Park Center / Architect: Bonsar Office 2016

Silva Maxi

Light distributions

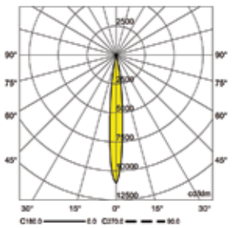

Spot(S)

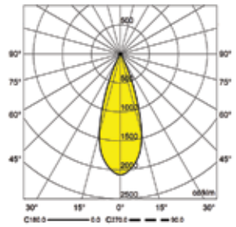

Medium(M)

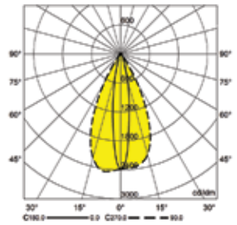

Oval(O)

Accessories

Order code table

Body Color	3000K	Beam Angle	4000K	Body Color
Silver	F925S4030S	Spot	F925S4040S	Silver
	F925S4030M	Medium	F925S4040M	
	F925S4030O	Oval	F925S4040O	

*Customized body color and other light distribution are also available upon request

*Customized body colors and other color temperatures (CCTs) are available upon request

Vaswa Micro

Exterior Projector

Compact and powerful
Small projector for facade and garden lighting

Vaswa Micro

Exterior Projector

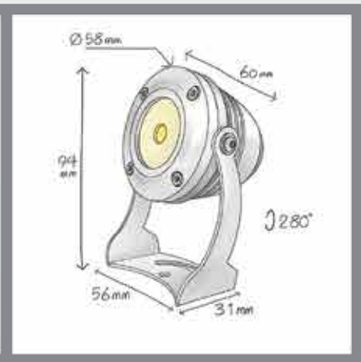

CODE	F902
Light source	LED
Power (W)	5
luminous flux (lm)	800
Color Rendering (Ra)	>80
Color Temperature (K)	3000 | 4000*
Body Color	Gray*

IP 65

0.76 (Kg)

20 x 16 x 12.3 (Cm)

Supply Voltage:
220-240 Vac,50Hz
Recommended Applications:
Residential | Office | Shop
Facade Lighting | Garden

GreenLand / Architect: Mehrdad Iravanian

Vaswa Micro

Light distributions

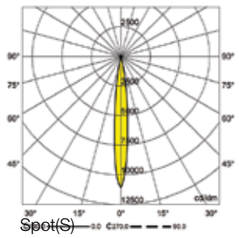

Spot(S)

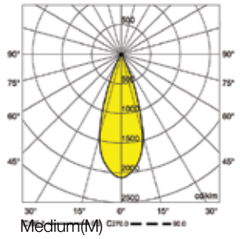

Medium(M)

Accessories

Order code table

Body Color	3000K	Beam Angle	4000K	Body Color
Gray	F902G530S	Spot	F902G540S	Grey
	F902G530M	Medium	F902G540M	

*Customized body colors and other color temperatures (CCTs) are available upon request

Vaswa Midi

Exterior Projector

Compact and powerful
Small projector for facade and garden lighting

Vaswa Midi

Exterior Projector

CODE	F900
Light source	LED
Power (W)	8
luminous flux (lm)	800
Color Rendering (Ra)	>80
Color Temperature (K)	3000 | 4000*
Body Color	Gray*

IP 65

0.76 (Kg)

20 x 16 x 12.3 (Cm)

Supply Voltage:
220-240 Vac,50Hz
Recommended Applications:
Residential | Office | Shop
Facade Lighting | Garden

▲ Sadr Highway
Architect: Hegza Consulting Engineering 2014

▼ Bank Melli Ferdowsi
Architect: Padiav Parth Architects 2017

▲ Green Land
Architect: Mehrdad Iravanian 2014

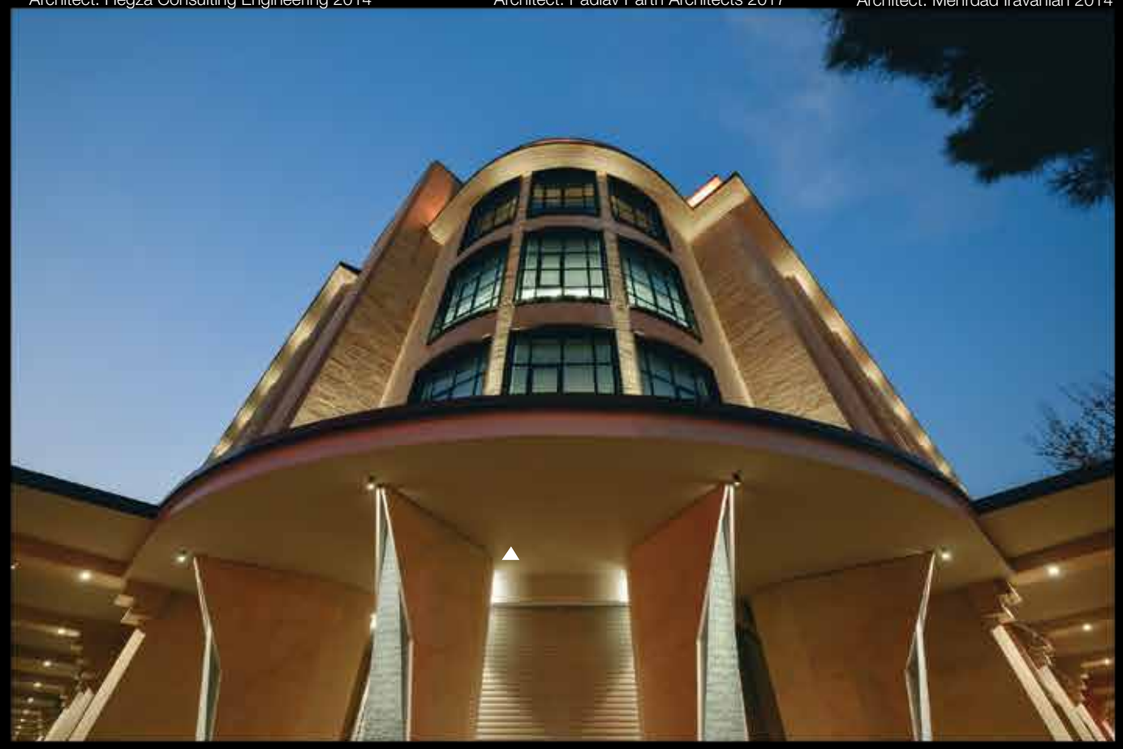

Vaswa Midi

Light distributions

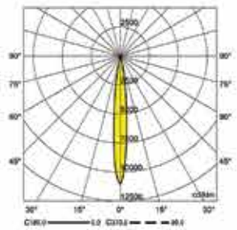

Spot(S)

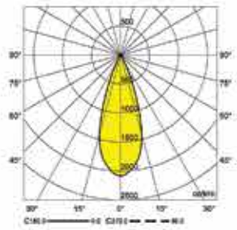

Medium(M)

Accessories

Order code table

Body Color	3000K	Beam Angle	4000K	Body Color
Gray	F900G830S	Spot	F900G840S	Grey
	F900G830M	Medium	F900G840M	

*Customized body colors and other color temperatures (CCTs) are available upon request

Aban Residential / Architect: Gozar Andishe

Vaswa Maxi

Exterior Projector

For facade and landscape
For delightful outdoor atmosphere

Vaswa Maxi

Exterior Projector

CODE	F905
Light source	LED
Power (W)	12
luminous flux (lm)	1320
Color Rendering (Ra)	>80
Color Temperature (K)	3000 | 4000*
Body Color	Gray*

IP 65

2.61 (Kg)

28 x 25 x 17 (Cm)

Supply Voltage:
220-240 Vac,50Hz
Recommended Applications:
Residential | Office | Shop
Facade Lighting | Garden

Bank Melli Ferdowsi / Padiav Parth Architects ▲

▼ Hana Boutique Hotel / Architect: Persian Garden 2018

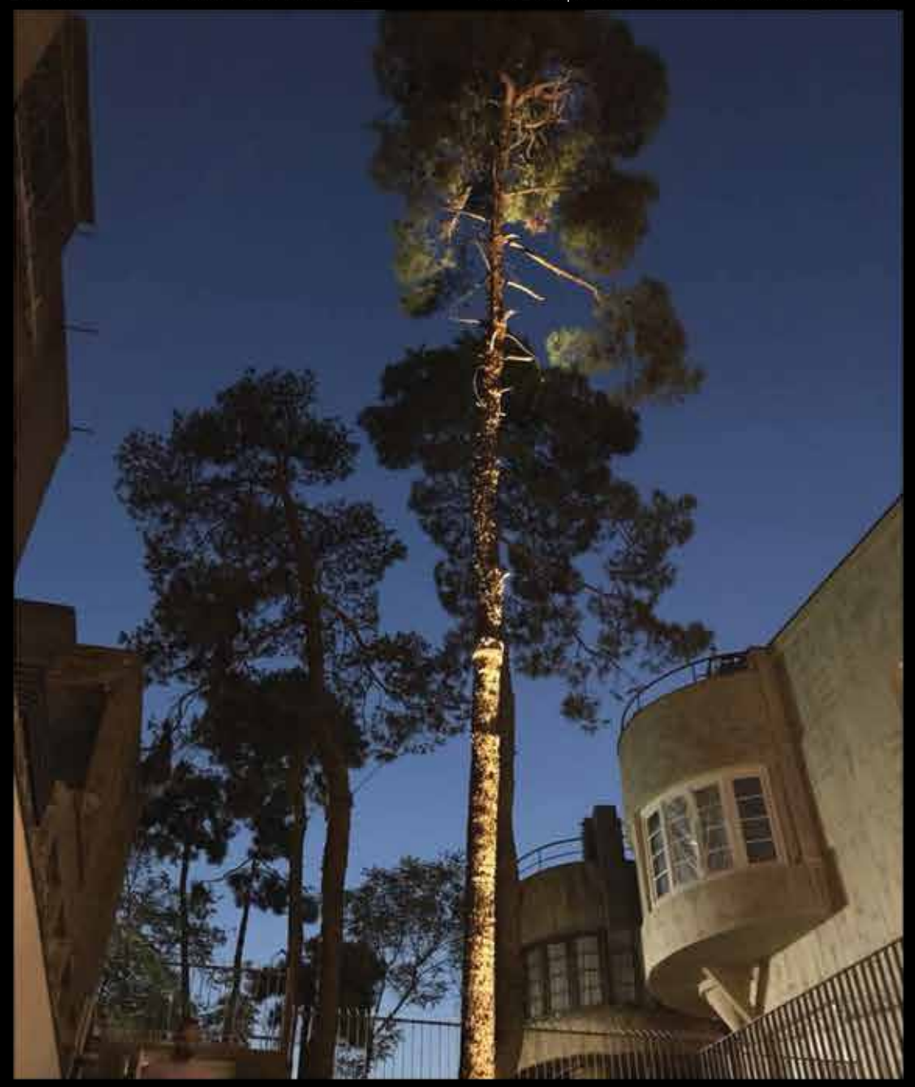

Vaswa Maxi

Light distributions

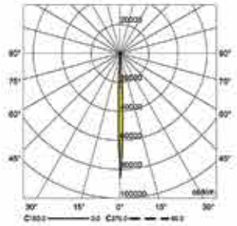

Extreme Spot(S)

Accessories

Order code table

Body Color	3000K	Beam Angle	4000K	Body Color
Gray	F905G1230XS	Extreme Spot	F905G1240XS	Gray

*Customized body colors and other color temperatures (CCTs) are available upon request

Torso
Wall Mounted

For facade and landscape
For delightful outdoor atmosphere

Torso

Wall Mounted

CODE	F940
Light source	LED
Power (W)	2x6
luminous flux (lm)	2x600
Color Rendering (Ra)	>80
Color Temperature (K)	3000 | 4000*
Body Color	White | Black | Gray*

IP 65

0.73 (Kg)

20 x 16 x 12.3 (Cm)

Supply Voltage:
220-240 Vac,50Hz
Recommended Applications:
Residential | Facade Lighting

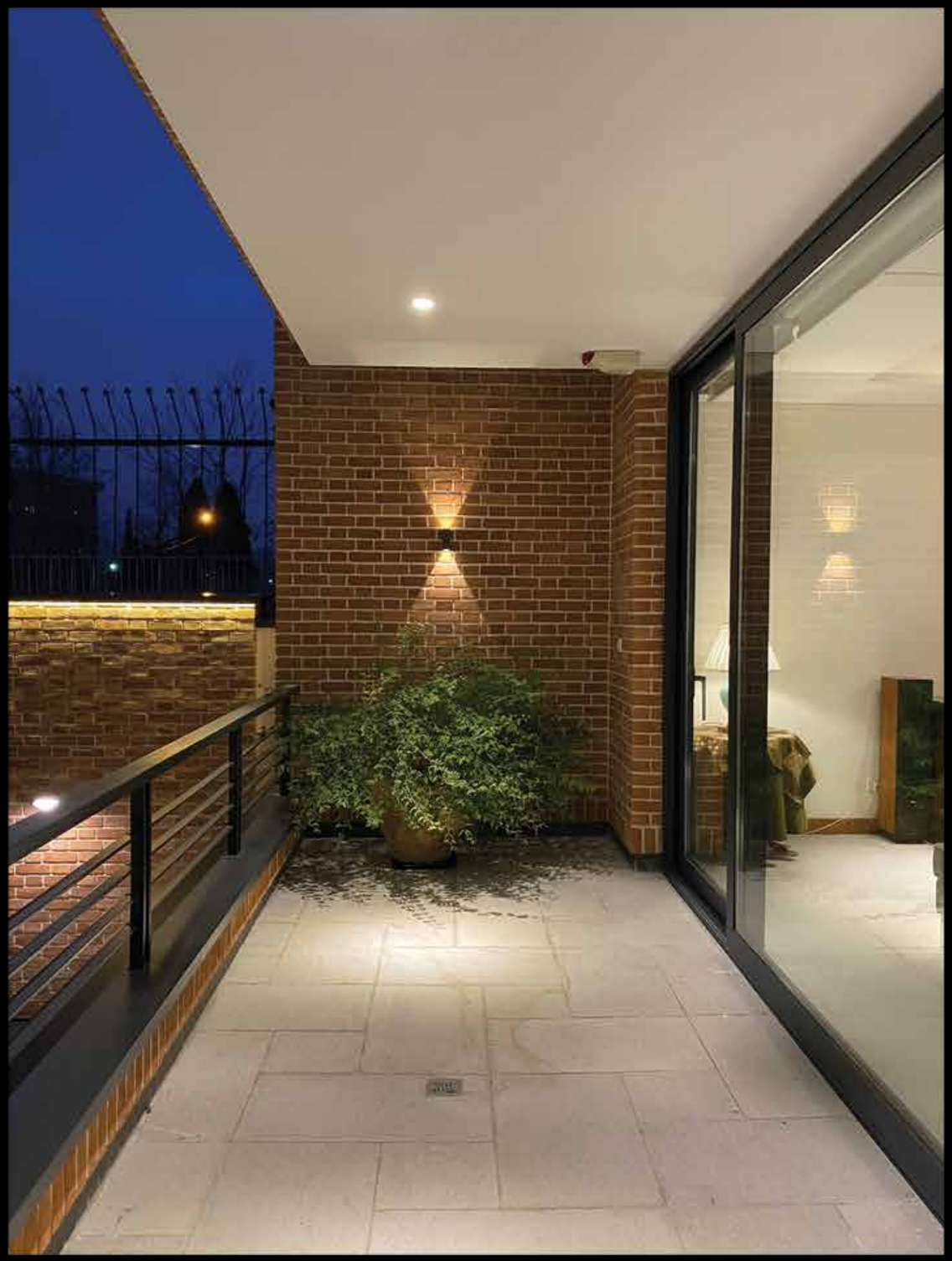

Aban Residential / Architect: Gozar Andishe 2019

Torso

Light distributions

Accessories

Optional

Double LED GU10 Lamp
Order code: 10020101

Order code for GU10 version*

Body Color	Order Code
White	F940WG
Black	F940BG
Gray	F940GG

.Lamp is not included

*Customized body colors and other color temperatures (CCTs) are available upon request

Kafi Abadi Residential

Architect: Bonsar Office 2019

Accessories

Accessories

Surface Track 3Phase

Body Color	Order Code	Lenght(m)	Order Code	Body Color
White	25106	1	25102	Black
	25206	2	25202	
	25306	3	25302	
	25406	4	25402	

End Cap

Body Color	Order Code		Body Color
White	555112171	555112172	Black

End Feed(earth right)

Body Color	Order Code		Body Color
White	555112011	555112012	Black

End Feed(earth left)

Body Color	Order Code		Body Color
White	555112021	555112022	Black

X Coupler(with feeding option)

Body Color	Order Code		Body Color
White	555112161	555112162	Black

Accessories

L Coupler(with feeding option earth outside)

Body Color	Order Code		Body Color
White	555112091	555112092	Black

L Coupler(with feeding option earth inside)

Body Color	Order Code		Body Color
White	555112101	555112101	Black

I Coupler(with feeding option)

Body Color	Order Code		Body Color
White	555112081	555112082	Black

Flex Coupler(30 to 330 degree with feeding option)

Body Color	Order Code		Body Color
White	555112111	555112112	Black

T Coupler(with feeding option earth inside right)

Body Color	Order Code		Body Color
White	555112121	555112122	Black

Accessories

T Coupler(with feeding option earth inside left)

Body Color	Order Code		Body Color
White	555112131	555112132	Black

T Coupler(with feeding option earth outside right)

Body Color	Order Code		Body Color
White	555112141	555112142	Black

T Coupler(with feeding option earth outside left)

Body Color	Order Code		Body Color
White	555112151	555112152	Black

Krab

Body Color	Order Code		Body Color
White	FE10W6036	FE10B6036	Black

Beno LED Strips

Order Code	Power(W/m)	Voltage(V)	CCT(K)
F80014306033	14	24 V-DC	3000
F80014406033	14	24 V-DC	4000
F80010306033	10	24 V-DC	3000
F80010406033	10	24 V-DC	4000

Earth Run Layout Help

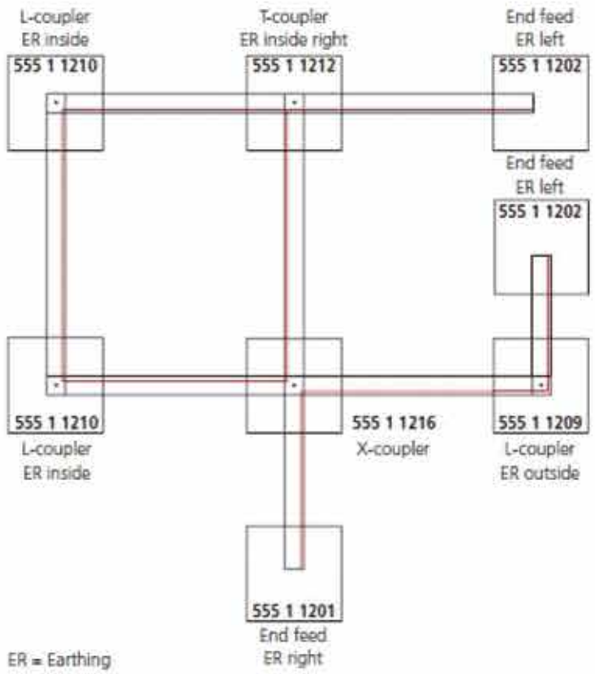

Surface Track 3Phase

Mechanical Load

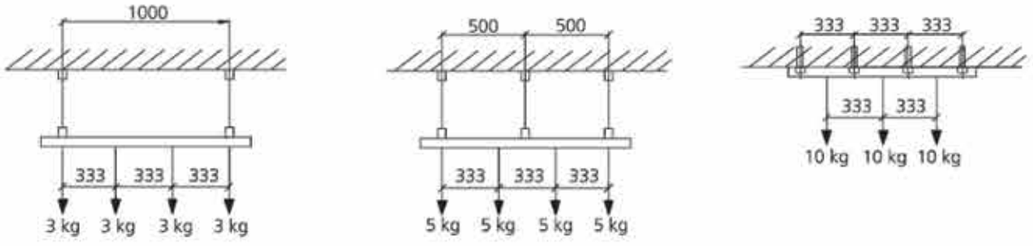

3~ track wiring diagram

a) Connection to AC 230V (220 - 240V)
maximum load: 3.600 W (3.500 - 3.800 W)
Total load can spread on any circuit

fuse	1 x 16 A
power supply cable	min. 3 x 1.5 mm²
power supply cable	min. 3 x 2.5 mm²

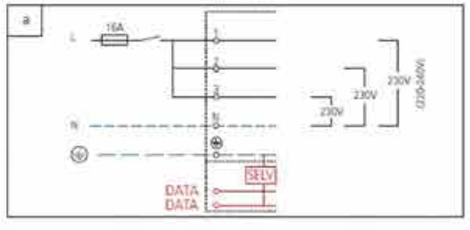

Hana Boutique Hotel

Architect: Persian Garden Studio

Guide To Fenos Products Coding

F	115	B	20	40	M
Fenos	Product Family Code	Body Color	Power Consumption(w)	CCT(K)	Beam Angle
	e.g Vera: 300 Felka Mini: 315	B: Black W: White S: Silver G: Gray WB: White-Black	e.g Vera: 35 Felka Mini: 12	27: 2700K 30: 3000K 40: 4000K 60: 6000K	XS: Extreme Spot S: Spot SM: Spot-Medium M: Medium MW: Medium Wide W: Wide WW: Wall Washer DW: Double Wallwasher O: Oval

Alephabetic index

Aro	166
Belta	128
Beno LED Strip	252
Darklans	14
Eyden L	98
Eyden Mini	94
Eyren Maxi	32
Eyren Micro	36
Eyren Midi	28
Eyren Mini	24
Felka Maxi	158
Felka Midi	152
Felka Mini	140
Filde Micro	36
Filde Mini	40
Fitran C Mini	52
Fitran Q	108
Krab	252
Merbo Midi	136
Merbo Mini	132
Nian	78
Pelka	174
Rico	44
Roni	116
Roni WW	112
Sibron C Maxi	90
Sibron C Micro	60
Sibron C Mini	64
Sibron C Midi	68
Sibron CF-TR	48
Sibron Q Maxi	90
Sibron Q Midi	86
Sibron Q Mini	82
Silva Maxi	224
Silva Midi	220
Sira OL	194
Sira P 6090	204
Sira R 1616	190
Sira R 6040	214
Sira R 6090	210
Sira S 1616	186
Sira S 6090	200
Surface Trac 3Phase	250
Tiran C Mini	56
Tiran S	102
Torso	242
Valman	120
Vaswa Maxi	238
Vaswa Micro	228
Vaswa Midi	232
Vera	178
Vera Twin	182

Guide To selection of the right beam angle, depending on the object size and distance from the light source

Beam Angle

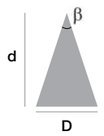

	Extreme Spot	Spot	Spot Medium	Medium	Medium Wide	Wide
	XS	S	SM	M	MW	W
	<8 Degree	10-15 Degree	20-30 Degree	30-40 Degree	40-50 Degree	>50 Degree
The diameter of the illuminated area at the distance of 2m	20 cm	50 cm	80 cm	140 cm	160 cm	230 cm
Objects	Shoe Bag Small Sculpture	Vase Small Paintings Home Applications	Coat Medium Sculpture 3 Person Table	Mannequins Small Size Carpet Medium Size Tree	Automobile Big Painting Big Size Tree	Big Sculpture Big Painting Carpet
Recommended products from Fenos	Felka Mini XS Fitro XS Nian XS Vaswa Maxi XS	Felka Mini S Roni S Sibron C Mini S Sibron Cf-TR S Tiran S Vaswa Midi S	Felka Mini MS Tiran S	Felka M Sibron C M Sibron Cf-TR M Vaswa Midi M	Felka Maxi M Felka Mini M Pelka M Vera M Vera Twin M	Felka Mini W Roni W
Diameter to distance Ratio (DdR)	0.1	0.25	0.4	0.7	0.8	1.15

Installation Instruction

Trimless Lights

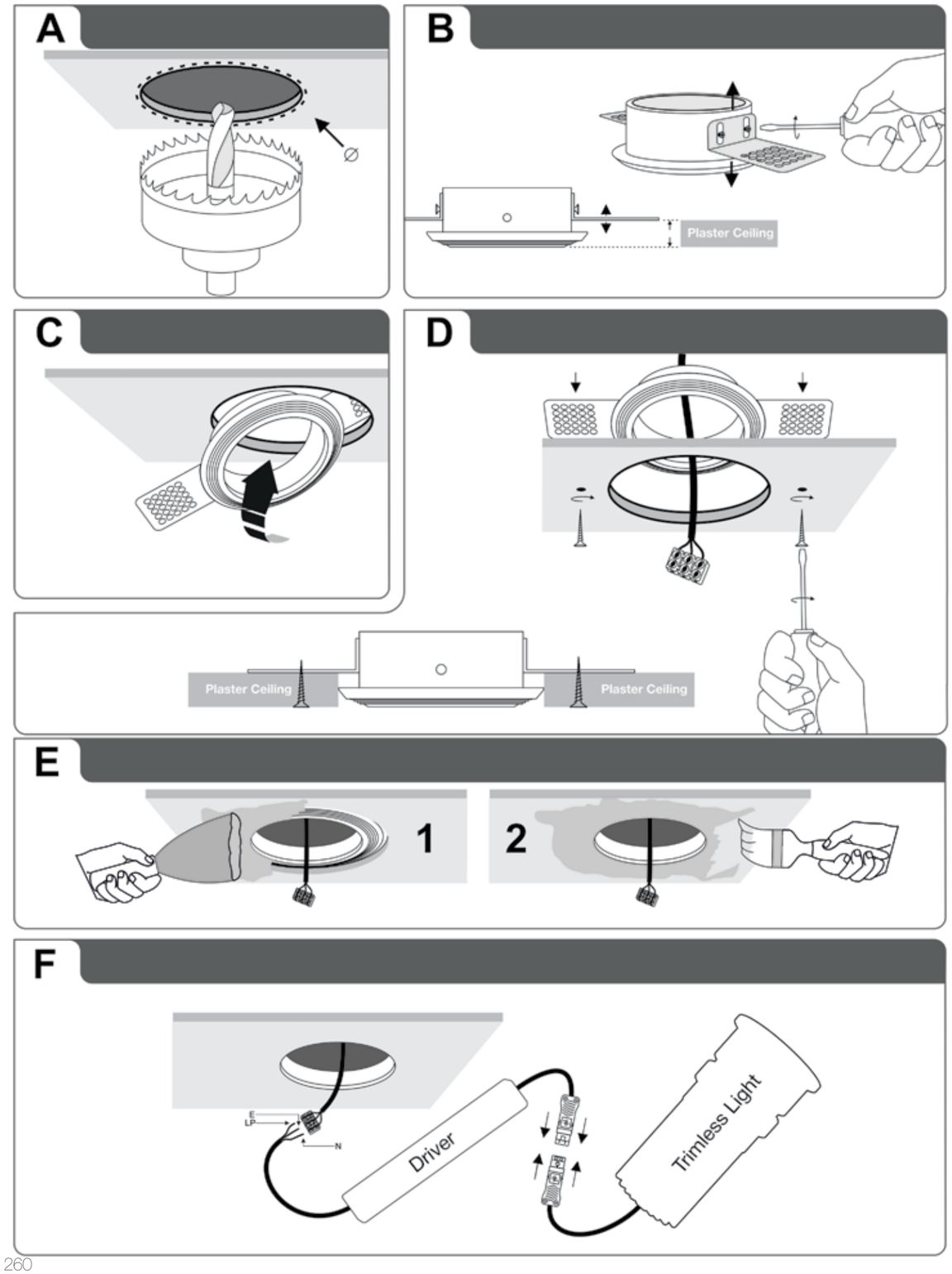

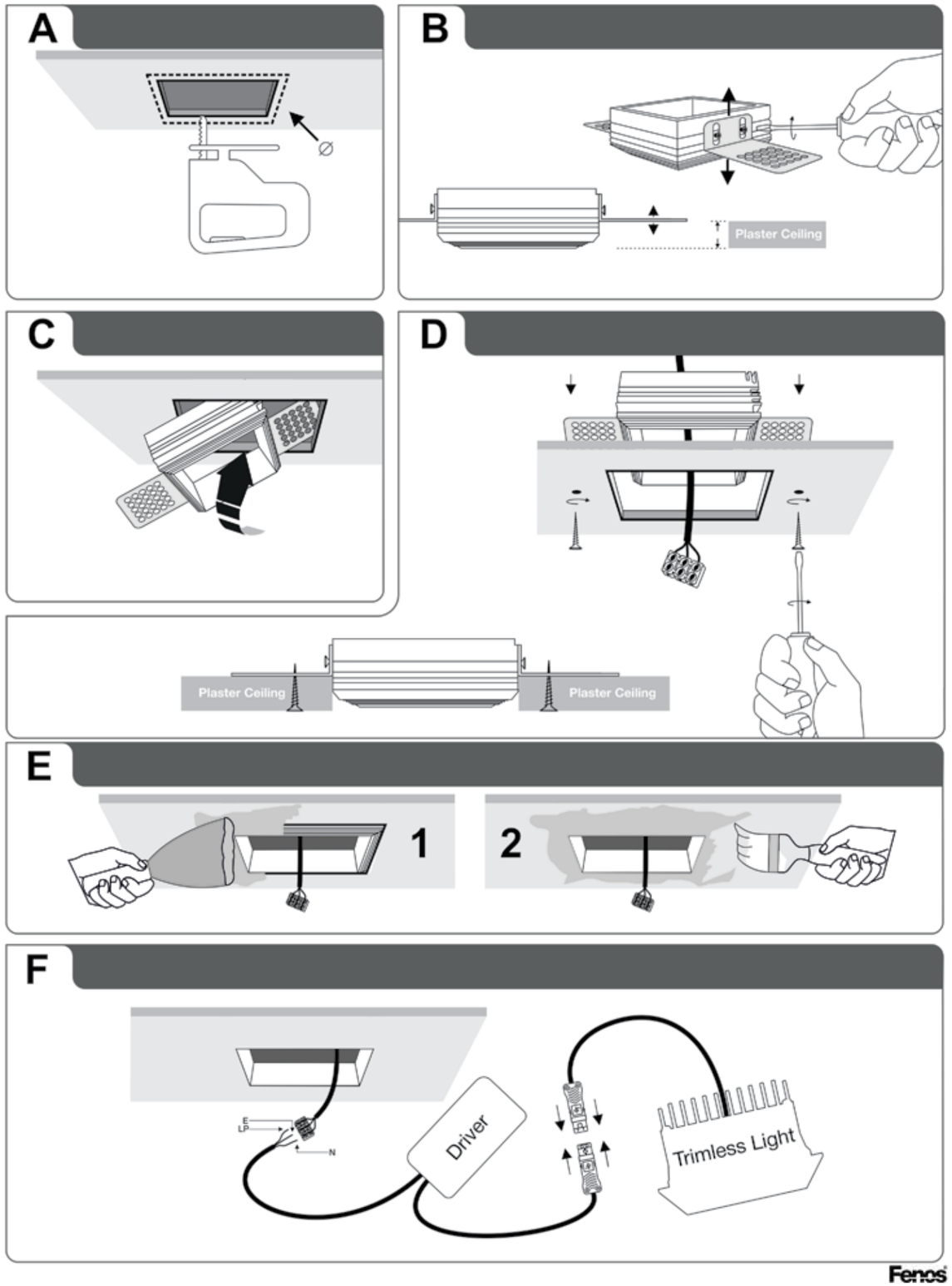

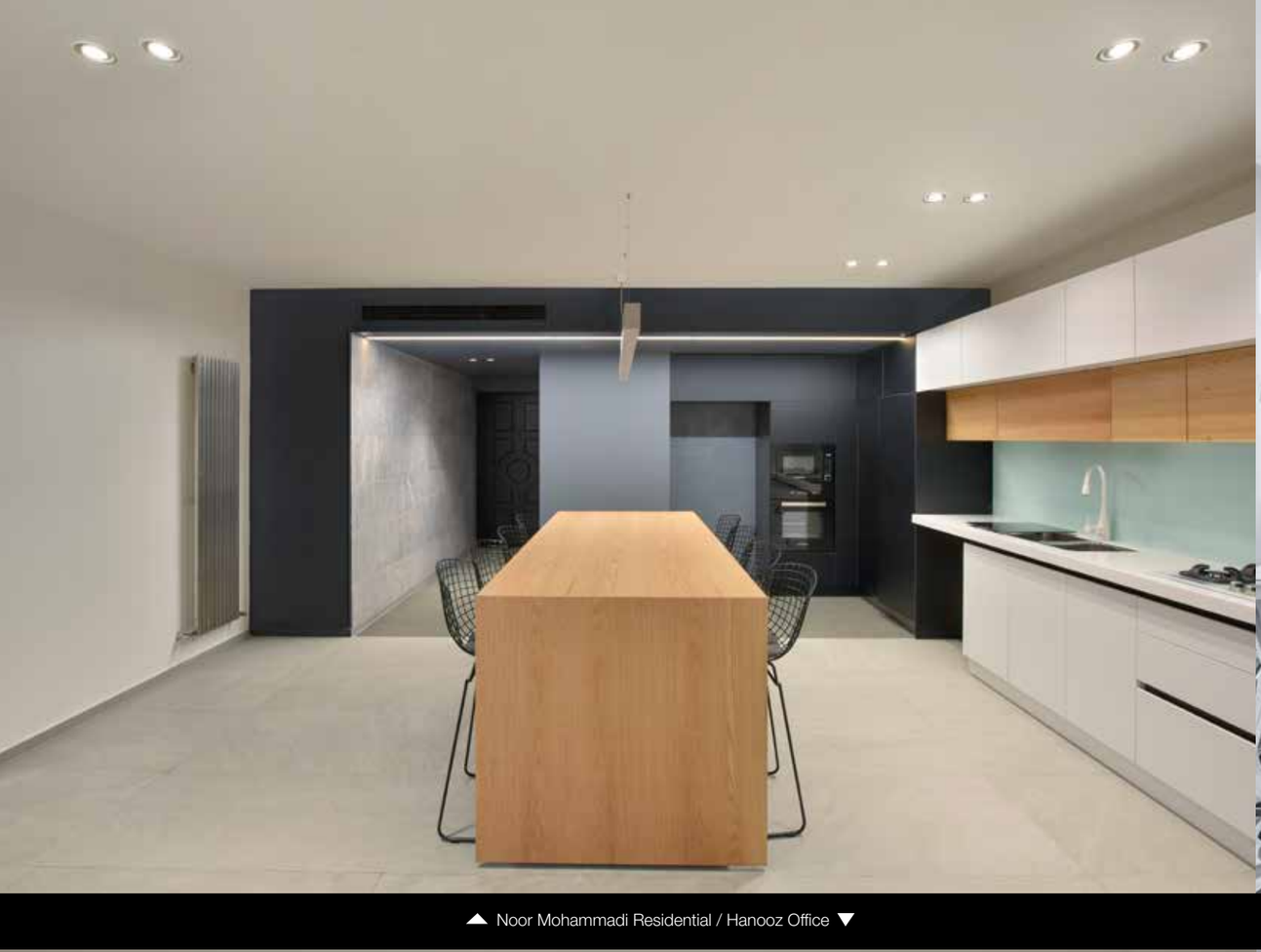

▲ Noor Mohammadi Residential / Hanooz Office ▼

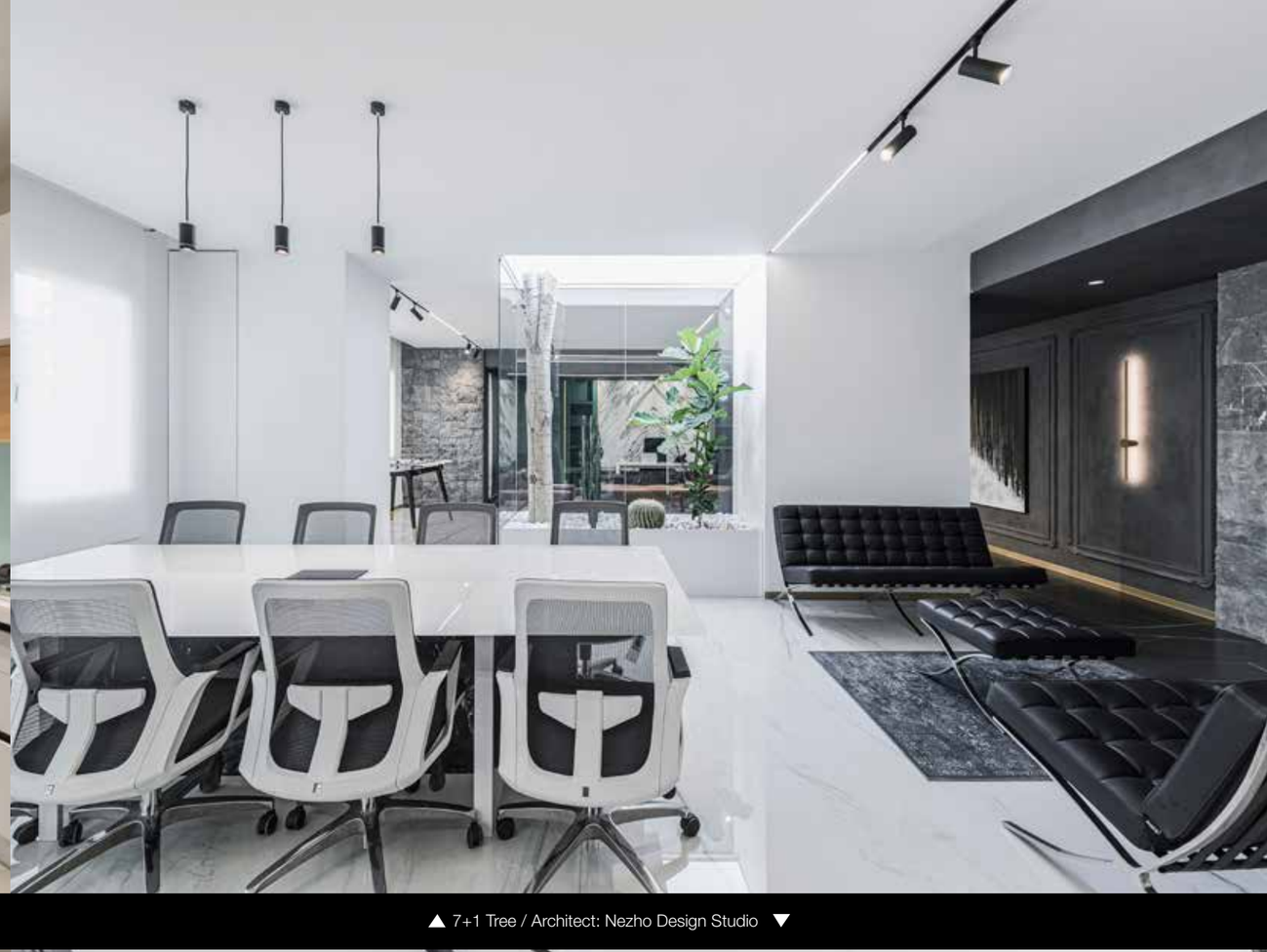

▲ 7+1 Tree / Architect: Nezho Design Studio ▼

Hana Boutique Hotel / Architect: Persian Garden Studio